I-JOIST INSTALLATION INFORMATION

ATTENTION BUILDER

Enclosed is IMPORTANT information on how to safely and properly install RedBuilt™ Joists. Personal injury or death may result from failure to read and follow this information.

RedBUILT™ Engineered Wood Products

1 PRODUCT HANDLING

THIS

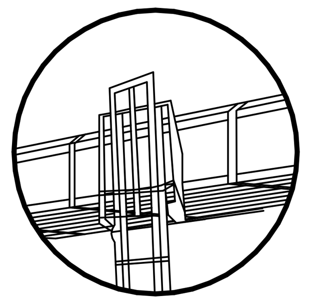

Lift joists from underside only.
DO NOT dump or drop from truck.

NOT THIS

DO NOT lift joists by top flange

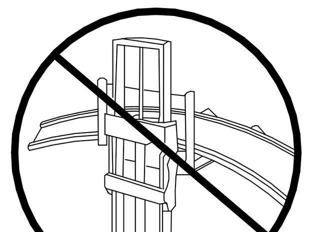

DO NOT lift joists in the flat orientation

2 PRODUCT STORAGE

THIS

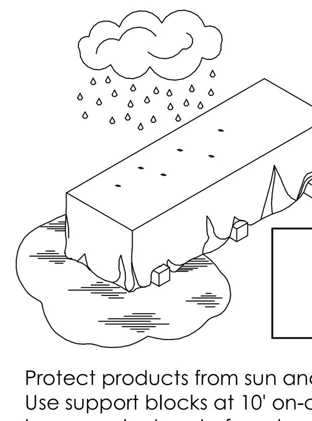

CAUTION
Wrap is slippery when wet or icy.

- Protect products from sun and water.
- Use support blocks at 10' on-center to keep products out of mud and water.

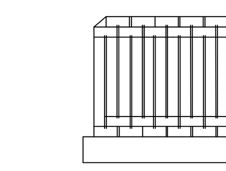

Store and handle joists in vertical orientation. Leave joists banded together until ready to install.

NOT THIS

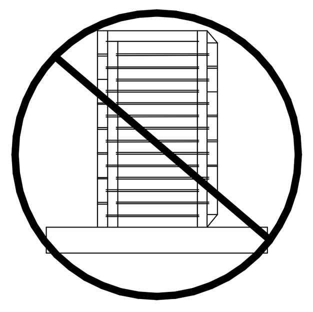

DO NOT store joists in the flat orientation

WARNING
Workers should stay clear when cutting the banding to avoid possible injury from flying banding or toppling joists.

3 FLANGE AND BEAM NAILING

Nailing pattern to be per contract drawings and specification. In addition, nail spacing shall comply with the criteria listed.

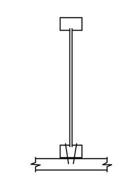

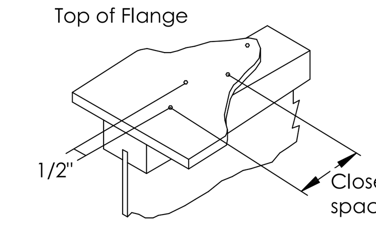

Joist attachment: For 1 3/8" thick flanges, attach with a minimum of one 8dx2 1/2" box nail, each side of Red-I™ joist at bearing. Use 10dx3" box nails with 1 1/2" thick flanges, 12dx3 1/4" box nails with 1 3/4" thick flanges and 16dx3 1/2" box nails with 2 1/2" thick flanges. Maintain 1 1/2" minimum end distance to minimize splitting.

IMPORTANT
Nailing closer than specified may cause the flange to split.

Nailing of sheathing			
	Closest On-Center Spacing Per Row(1)		
Nail Size	1 1/2" Thick I-Joist Flange(2)	1 3/8" Thick I-Joist Flange(2)(6)	RedLam™ LVL Narrow Face
.113"x2 1/2"	2"	4"	3"
.131"x2 1/2"	2"	4"	3"
.128"x3"	2"	4"	3"
.148"x3"	3"	4"	4"(4)
.128"x3 1/4"	2"	4"	3"
.148"x3 1/4"	3"	4"	4"(4)
.135"x3 1/2"	3"	4"	4"
.148"x3 1/4"	3"	4"	4"(4)
.162"x3 1/2"	4"	6"	8"(5)

(1) If more than one row of nails is used, offset rows at least 1/2" and stagger. Maintain 3/8" minimum edge distance.
(2) Sheathing must be nailed to the full length of the top (or compression) flange on the I-joist with the maximum nail spacing as follows:
- 18" OC for I-joists with flange widths less than 2".
- 24" OC for I-joists with flange widths greater than 2".

(3) 14-gauge staples may be a direct substitute for 8dx2 1/2" nails if a minimum penetration of 1" into the flange is maintained.
(4) Minimum spacing must be 5" for 4 rows of nails.
(5) Spacing may be reduced to 5" where nail penetration does not exceed 1 3/8".
(6) For diaphragm nailing criteria see section 4.2.7 AWC SDPWS.
Maximum diaphragm nail penetration for Red-I45L™ and Red-I58™ joists is 1 3/8".

4 WEB STIFFENER REQUIREMENTS

Minimum Web Stiffener Size and Material

Flange Width	Web Stiffener Size	Web Stiffener Material
1 3/4"	5/8"x2 5/16"	Sheathing (with face grain vertical) that meets the requirements of PS1 or PS2
2.1"	3/4"x2 5/16"	
2.3", 2 1/2"	7/8"x2 5/16"	
3 1/2"	2x4	Construction grade or better Red-I90HS™ Joists require LVL/LSL

Load Transfer at Concentrated Loads

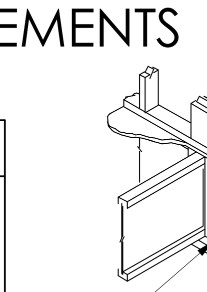

Use solid 2x blocking under post to transfer load around joist. Cut blocks 1/16" longer than joist depth.

- *Web stiffener requirements vary based on joist series and depth; they are always required at bearing on joists 20" in depth or greater.*
- *See plan/details for requirements specific to the joists being used on this project.*
- *If web stiffeners are required at hanger locations, they must be attached before placing joist in hanger.*

Nailing Quantities for Web Stiffener Attachment

Red-I™ Joist Depth	Red-I45L™ Red-I45™	Red-I45™ Red-I45L™ Red-I53™ Red-I58™	Red-I65™	Red-I90™ Red-I90H™		Red-I90HS™
	16g staple x 1 1/2" with 7/16" crown	0.113"x 2 1/2" Nails(1)		0.135" x 3 1/2" Nails(2)		
	End or Intermediate	End or Intermediate	End or Intermediate	End	Intermediate	End or Intermediate
9 1/2"	4	3	N/A	N/A	N/A	N/A
11 7/8"	4	3	3	3	3	5
14"	7	3	5	4	4	7
16"	8	3	6	5	5	7
18"	9	3	7	5	5	9
20"	11	3	8	6	6	11
22"	N/A	N/A	9	7	12	11
24"	N/A	N/A	10	7	14	13
26"	N/A	N/A	11	8	15	15
28"	N/A	N/A	12	9	16	15
30"	N/A	N/A	13	9	18	17
32"	N/A	N/A	N/A	N/A	N/A	19

(1) 0.113x2 1/4" smooth or deformed-shank nails are acceptable
(2) 0.131x3 1/4" smooth or deformed-shank nails are acceptable

- Web stiffeners required at load bearing wall or other concentrated load above (exceeding 1,500 lbs). See plan/details for specific requirements.
- AT ALL CONDITIONS: Web stiffener on both sides - must be tight against top or bottom flange. Attach to joist per chart

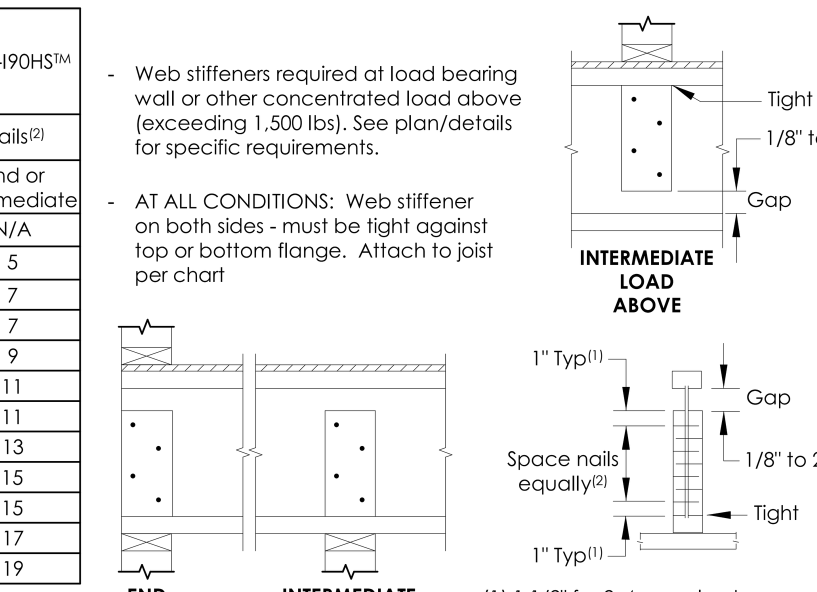

(1) 1 1/2" for 2x4 sawn lumber
(2) nails may be driven from one side only

5 INSTALLATION BRACING

DO NOT walk on the joists until all joist bearings and bracing have been permanently attached. Injury may result.

WARNING
Without correctly installed bracing, joists can buckle sideways or roll over, causing death, serious personal injury, or property damage.

NOTICE
Installation bracing and procedures, as well as the safety of workers, are the responsibility of the installer. The installer should make sure that this installation information is understood by all persons involved in the joist installation.

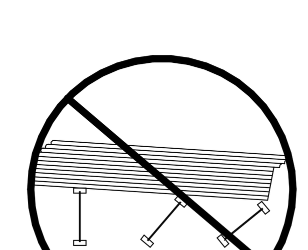

DO NOT stack building materials on unsheathed joists. Stack only over beams or walls.

IMPORTANT
Strut lines must extend to braced end wall, beam or sheathing.

Strut lines (1x4 minimum)
- 6' on-center for joists with 1 3/4" wide flanges
- 8' on-center for joists with 2.3" & 2 1/2" wide flanges
- 10' on-center for joists with 3 1/2" wide flanges

Strut lines are required at all bearing locations where joists are not otherwise braced.

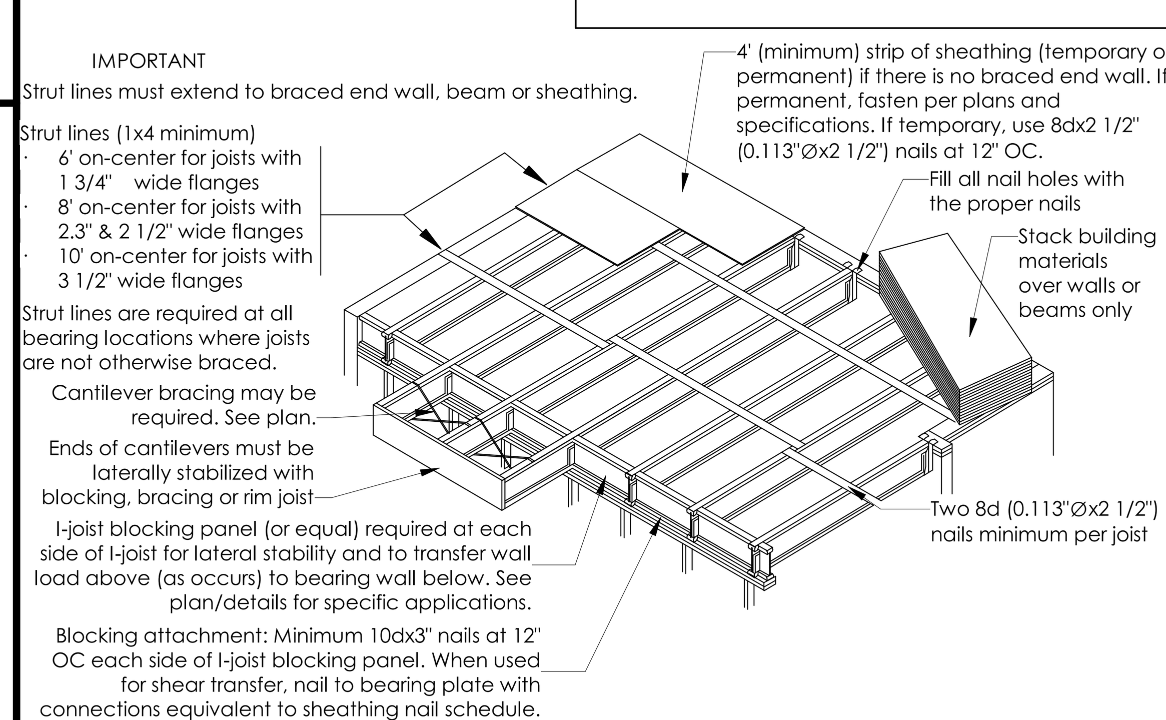

WARNING
- *All blocking, hangers, rim boards, and rim joists at the end supports of the I-joists must be completely installed and properly nailed.*
- *I-joist flanges must remain straight within 1/2" from true alignment.*
- *Sheathing must be completely attached to each I-joist before additional loads can be placed on the system.*
- *Without bracing, buckling sideways or rollover is highly probable under light construction loads like a worker or stacked sheathing.*

6 STANDARD INSTALLATION DETAILS

6A

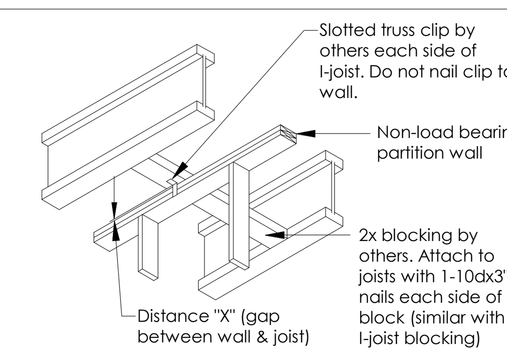

Spacing of clips and blocks per EOR

Distance "X"			
Under Roof		Under Floor	
Span	"X"	Span	"X"
0'-20'	1 1/4"	0'-20'	3/4"
20'-40'	2 1/2"	20'-40'	1 1/4"
40'-60'	4"	40'-60'	2"

Recommended Attachment for Non-load Bearing Partitions

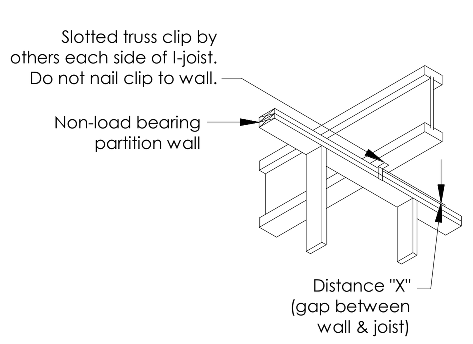

6B

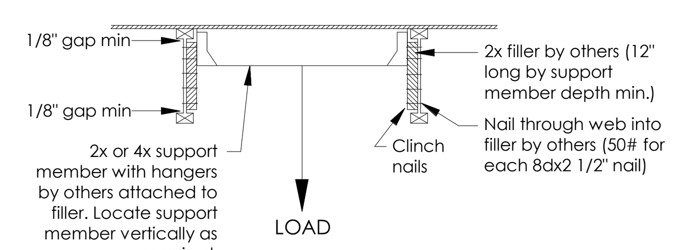

Note: Use this detail for loads exceeding 250 lbs. per I-joist. A 250 lb. load can be supported on each side of the joist's bottom flange at 5'-0" on center, provided the load is included in normal design loads.

Support Detail for Loads Supported from I-joist

6C

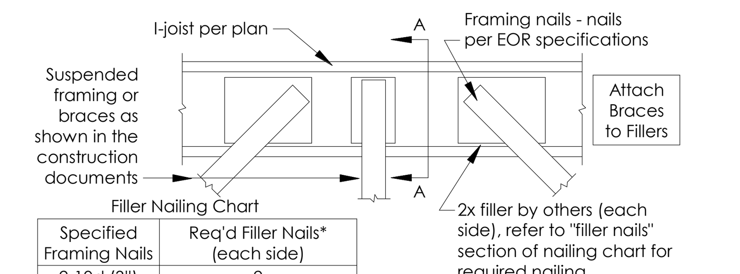

Filler Nailing Chart

Specified Framing Nails	Req'd Filler Nails* (each side)
2-10d (3")	2
4-10d (3")	3
6-10d (3")	5
2-16d (3 1/2")	2
4-16d (3 1/2")	3
6-16d (3 1/2")	5

*Filler nails shall be 16d sinker or 12d common (0.148", 3 1/4" long)

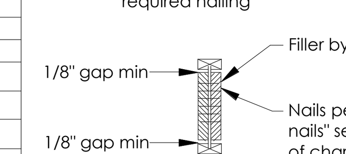

Section A-A

Suspended Framing from I-joists

6D

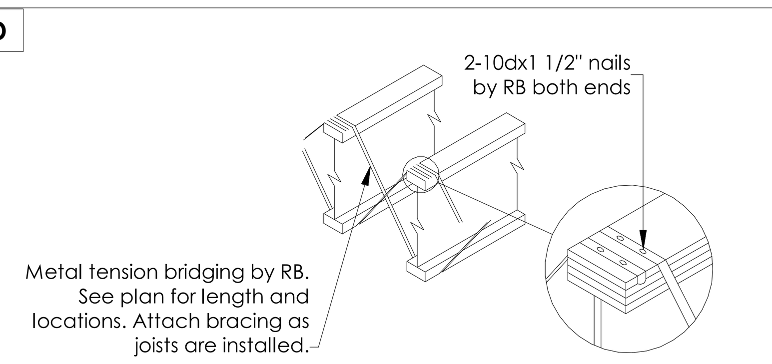

Continuous Tension Bridging

6E

NOTE:
2-10dx3" nails through nailer and into bottom flange, typical at each joist

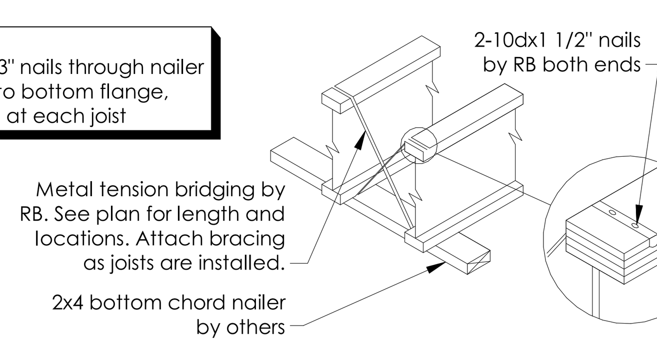

Tension Bridging with Nailer

6F

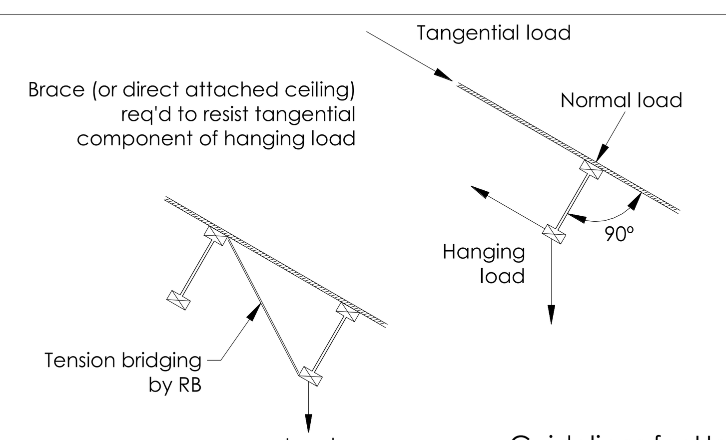

1. The joists are designed for the normal component of the vertical load only. The tangential component of the vertical load must be designed into the roof diaphragm.
2. The top flange alignment must remain straight within 1/2"
3. Top and bottom flange must be aligned in a plane perpendicular to the roof deck. Depending on slope and span, temporary bracing may be req'd to maintain alignment until roof is sheathed.
4. The roof system is unstable until sheathed. do not stack sheathing materials on unsheathed portions of the roof.
5. Bracing is req'd for the support of any loads connected to the flange of any joist.

Guidelines for Hanging Loads at Oblique Joists

Rev 09/22

7 ALLOWABLE HOLES

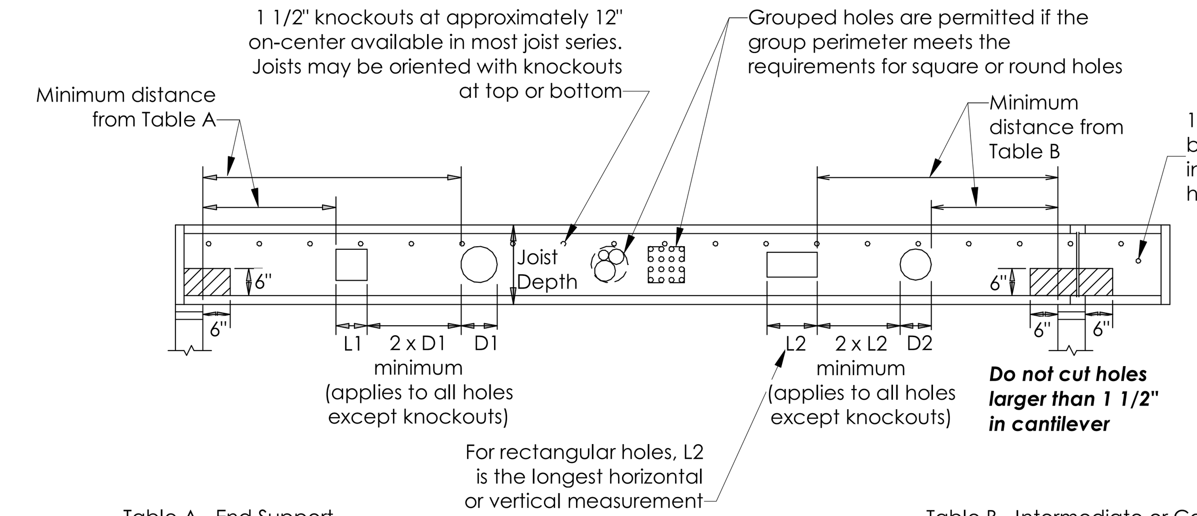

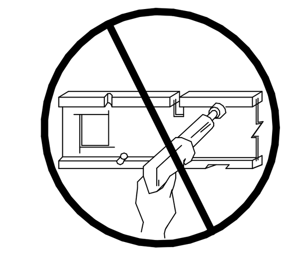

DO NOT cut, drill, or notch flanges

Table A - End Support

Minimum distance from edge of hole to inside face of nearest end support

Joist Depth	Joist Series	Round Hole Size 2"	4"	6"	8"	10"	12"	14"	16"	18"	20"
		Square or Rectangular Hole Size 1.25"	2.5"	4"	5"	6"	7"	8.5"	9.5"	10.5"	13"
9 1/2"	I45L / I45	1'-0"	***2'-6"***	***4'-0"***	-	-	-	-	-	-	-
	I58 / I65	1'-6"	***3'-0"***	***5'-0"***	-	-	-	-	-	-	-
	I90	2'-0"	3'-6"	***5'-6"***	-	-	-	-	-	-	-
11 7/8"	I45L / I45	1'-0"	2'-0"	***3'-6"***	***5'-0"***	-	-	-	-	-	-
	I58 / I65	1'-6"	3'-0"	***4'-6"***	***6'-6"***	-	-	-	-	-	-
	I90/ I90H	1'-6"	3'-6"	5'-6"	***7'-0"***	-	-	-	-	-	-
	I90HS	2'-0"	4'-0"	6'-6"	-	-	-	-	-	-	-
14"	I45L / I45	1'-0"	2'-0"	3'-0"	***4'-0"***	***6'-0"***	-	-	-	-	-
	I58 / I65	1'-0"	2'-6"	4'-0"	***5'-6"***	***8'-0"***	-	-	-	-	-
	I90/ I90H	1'-0"	3'-0"	5'-0"	6'-6"	***9'-0"***	-	-	-	-	-
	I90HS	2'-0"	4'-0"	6'-0"	8'-0"	-	-	-	-	-	-
16"	I45 / I65	1'-0"	1'-6"	3'-0"	4'-0"	***5'-0"***	***8'-0"***	-	-	-	-
	I58	1'-0"	1'-6"	3'-0"	4'-6"	***6'-6"***	***9'-6"***	-	-	-	-
	I90/ I90H	1'-0"	2'-0"	4'-0"	6'-0"	8'-6"	***10'-6"***	-	-	-	-
	I90HS	2'-0"	4'-0"	6'-0"	8'-0"	10'-0"	-	-	-	-	-
18"	I45 / I65	1'-0"	1'-0"	2'-6"	3'-6"	4'-6"	***6'-0"***	***9'-0"***	-	-	-
	I90/ I90H	1'-0"	1'-0"	2'-6"	5'-0"	7'-0"	9'-6"	***12'-6"***	-	-	-
	I90HS	2'-0"	4'-0"	6'-0"	8'-0"	10'-0"	12'-0"	-	-	-	-
20"	I45 / I65	1'-0"	1'-0"	2'-0"	3'-0"	4'-0"	5'-0"	***7'-0"***	***10'-6"***	-	-
	I90/ I90H	1'-0"	1'-0"	2'-0"	4'-0"	6'-0"	8'-0"	11'-0"	***14'-0"***	-	-
	I90HS	2'-0"	4'-0"	6'-0"	8'-0"	9'-6"	11'-6"	14'-0"	-	-	-
22"	I65	1'-0"	1'-0"	1'-6"	2'-6"	3'-6"	4'-6"	5'-6"	7'-6"	***11'-6"***	-
	I90/ I90H	1'-0"	1'-0"	1'-0"	3'-0"	5'-0"	7'-0"	9'-0"	12'-6"	***16'-0"***	-
	I90HS	2'-0"	4'-0"	6'-0"	8'-0"	9'-6"	11'-6"	13'-6"	16'-0"	-	-
24" to 26"	I65	1'-0"	1'-6"	2'-6"	3'-6"	4'-0"	5'-0"	6'-0"	7'-6"	***10'-0"***	-
	I90/ I90H	1'-0"	1'-0"	2'-0"	3'-6"	5'-0"	6'-6"	8'-6"	10'-6"	14'-6"	***18'-6"***
	I90HS	2'-0"	4'-0"	6'-0"	7'-6"	9'-6"	11'-6"	13'-6"	15'-0"	18'-0"	-
28" to 32"	I65	1'-0"	2'-0"	2'-6"	3'-6"	4'-0"	5'-0"	6'-0"	7'-0"	8'-0"	10'-6"
	I90/ I90H	1'-0"	1'-6"	2'-6"	4'-0"	5'-6"	6'-6"	8'-0"	9'-6"	11'-6"	14'-6"
	I90HS	2'-0"	3'-6"	5'-0"	7'-0"	8'-6"	10'-0"	12'-0"	13'-6"	16'-0"	18'-6"

Table B - Intermediate or Cantilever Support

Minimum distance from edge of hole to inside face of nearest intermediate or cantilever support

Joist Depth	Joist Series	Round Hole Size 2"	4"	6"	8"	10"	12"	14"	16"	18"	20"
		Square or Rectangular Hole Size 1.25"	2.5"	4"	5"	6"	7"	8.5"	9.5"	10.5"	13"
9 1/2"	I45L / I45	1'-0"	***2'-6"***	***5'-0"***	-	-	-	-	-	-	-
	I58 / I65	1'-6"	***4'-0"***	***6'-6"***	-	-	-	-	-	-	-
	I90	3'-0"	5'-6"	***8'-0"***	-	-	-	-	-	-	-
11 7/8"	I45L / I45	1'-0"	***2'-0"***	***4'-0"***	***6'-6"***	-	-	-	-	-	-
	I58 / I65	1'-0"	3'-0"	***5'-6"***	***8'-6"***	-	-	-	-	-	-
	I90/ I90H	2'-0"	4'-6"	7'-6"	***10'-0"***	-	-	-	-	-	-
	I90HS	3'-6"	6'-0"	9'-0"	-	-	-	-	-	-	-
14"	I45L / I45	1'-0"	1'-0"	3'-0"	***5'-0"***	***7'-0"***	-	-	-	-	-
	I58 / I65	1'-0"	1'-6"	4'-0"	***7'-0"***	***10'-6"***	-	-	-	-	-
	I90/ I90H	1'-0"	3'-6"	6'-0"	9'-0"	***12'-6"***	-	-	-	-	-
	I90HS	4'-0"	6'-6"	9'-0"	11'-6"	-	-	-	-	-	-
16"	I45 / I65	1'-0"	1'-0"	2'-0"	***4'-0"***	***6'-6"***	***10'-0"***	-	-	-	-
	I58	1'-0"	1'-0"	2'-0"	***4'-0"***	***6'-6"***	***10'-0"***	-	-	-	-
	I90/ I90H	1'-0"	1'-6"	4'-6"	8'-0"	11'-0"	***14'-6"***	-	-	-	-
	I90HS	3'-0"	6'-0"	8'-6"	11'-6"	14'-0"	-	-	-	-	-
18"	I45 / I65	1'-0"	1'-0"	1'-0"	2'-6"	***5'-0"***	***8'-0"***	***12'-0"***	-	-	-
	I90/ I90H	1'-0"	1'-0"	2'-6"	5'-6"	9'-0"	12'-6"	***17'-0"***	-	-	-
	I90HS	2'-6"	5'-6"	8'-0"	11'-0"	13'-6"	16'-6"	-	-	-	-
20"	I45 / I65	1'-0"	1'-0"	1'-0"	1'-0"	3'-6"	***6'-0"***	***9'-0"***	***13'-6"***	-	-
	I90/ I90H	1'-0"	1'-0"	1'-0"	3'-6"	7'-0"	10'-6"	14'-6"	***19'-6"***	-	-
	I90HS	2'-0"	5'-0"	7'-6"	10'-6"	13'-6"	16'-0"	19'-6"	-	-	-
22"	I65	1'-0"	1'-0"	1'-0"	1'-0"	2'-0"	4'-6"	7'-0"	10'-0"	***15'-0"***	-
	I90/ I90H	1'-0"	1'-0"	1'-6"	4'-0"	6'-6"	9'-6"	12'-0"	16'-0"	-	-
	I90HS	1'-0"	3'-0"	6'-0"	9'-0"	12'-6"	15'-6"	18'-6"	22'-0"	-	-
24" to 26"	I65	1'-0"	1'-0"	1'-6"	3'-0"	4'-6"	6'-0"	7'-6"	10'-0"	***13'-6"***	-
	I90/ I90H	1'-6"	3'-0"	4'-6"	6'-0"	7'-6"	9'-0"	11'-0"	14'-0"	***18'-6"***	-
	I90HS	1'-6"	4'-0"	6'-6"	9'-0"	11'-6"	14'-0"	17'-0"	20'-0"	23'-0"	-
28" to 32"	I65	1'-0"	1'-0"	1'-6"	3'-0"	4'-6"	6'-0"	7'-6"	9'-0"	11'-0"	***13'-6"***
	I90/ I90H	1'-6"	3'-0"	4'-6"	6'-0"	7'-6"	9'-0"	11'-0"	12'-6"	15'-6"	18'-6"
	I90HS	1'-0"	2'-6"	4'-6"	7'-0"	9'-6"	12'-0"	14'-6"	17'-0"	19'-6"	21'-6"

General Notes

- Tables are based on maximum allowable uniform loads. ***Bold Italic*** cells indicate 2000 lb. concentrated load spread over two joists has not been considered, use RedSpec™ software or contact your RedBuilt™ technical representative if concentrated load check is required.
- For other hole sizes, hole locations, or loads, use RedSpec™ software or contact your RedBuilt™ technical representative
- Holes may be located vertically anywhere in the web. Leave 1/8" of web (minimum) at top and bottom of hole. **DO NOT cut joist flanges.**
- Knockouts are located in web at approximately 12" on-center; they do not affect hole placement.
- **Do not cut holes in cantilever without consulting your RedBuilt™ representative.**

How to use Tables A and B

1. Determine the hole shape and size. For rectangular holes, use the largest dimension of the rectangle. Sizes given in the table are hole sizes, not duct sizes.
2. Determine the Red-I™ joist series and depth.
3. Determine the type of support on each side of the hole. If the Red-I™ joist is continuous over a support, use both tables. Use Table A if the joist terminates at both supports.
4. Find the table cell at the intersection of the Red-I™ joist and the hole.
5. The measurement shown is the minimum distance from the edge of the hole to the inside face of the support.
6. Maintain the minimum required distance from both supports.
7. It is permissible to interpolate between hole sizes shown in the tables.

RedBuilt™ Red-I® Product Sections - Refer to plan for series and depth

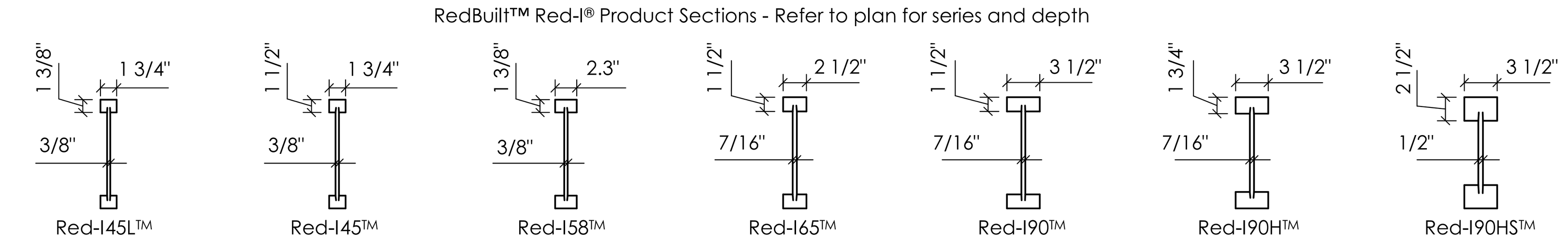

For allowable holes and fasteners information please scan the QR code or use the link below to access page number 3 of sprinkler system installation guide

https://www.redbuilt.com/SprinklerSystemInstallationGuide

For product warranty information please scan the QR code or use the link below to access the form

https://www.redbuilt.com/ProductWarranty

If you have questions or concerns:
Call your RedBuilt™ Representative directly, or for general customer service call (866) 859-6757

Sheet R002

RedBuilt, LLC 9/23/2022 9:43:29 AM

Red-I™, Red-I45™, Red-I45L™, Red-I58™, Red-I65™, Red-I90™, Red-I90H™, Red-I90HS™, Red-L™, Red-W™, Red-S™, Red-M™, Red-H™, RedLam™ are trademarks of RedBuilt, LLC.