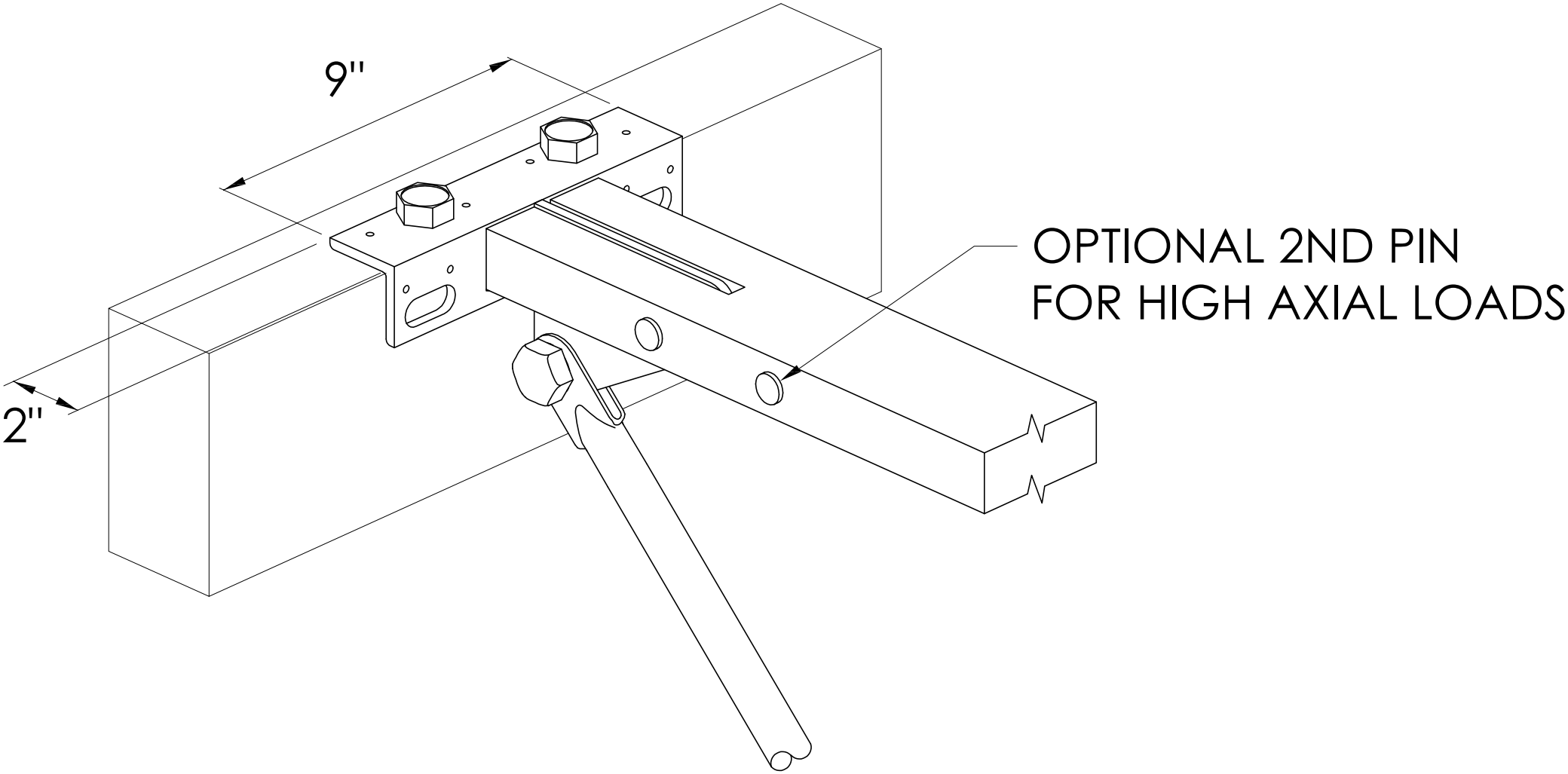

MAXIMUM SLOPE = $\frac{1}{2}$" PER FOOT.
SEE SPECIFIERS GUIDE FOR MINIMUM DEPTHS