Open-Web Trusses



Including Red-L,™ Red-W,™ Red-S,™ Red-M™ and Red-H™ Trusses

- Outstanding Strength-to-Weight Performance
- Easy Installation
- Custom Manufacturing
- Design Flexibility
- Economical Truss Solutions
- Limited Product Warranty

RedSPEC NEXT

Access the free online platform at Redspec.RedBuilt.com



TABLE OF CONTENTS

Features and Benefits	3
Design Center Services	4
Specifying Economical Trusses	4
Open-Web Truss Descriptions	5
Load Tables	6–11
Truss Details	12–23
Wind or Seismic Connections	24–26
Red-S™, Red-M™ and Red-H™ Truss Cap Plate Applications	27
Bridging	28
Allowable Duct Sizes	29
Installation Bracing	30–31
Long Span Installation	32
Material Weights	33
Snowdrift Loading	34
Tech Support and Analysis	34
Deflection and Camber Criteria	35
Nailing Information	36
Sound Details	36–37
Q&A	38
Specifications	39

Welcome to RedBuilt

RedBuilt is an exciting business offering building solutions for a broad range of commercial and custom residential applications. In addition to pioneering unique manufacturing technologies, RedBuilt provides world-class service and technical support for architects, specifiers and builders.

RedBuilt gives you access to reliable, innovative products, including RedBuilt™ open-web trusses, Red-I™ joists, and RedLam™ LVL beams and headers. And we keep things simple: You'll work with just one service-oriented supplier to get all these products—plus the support you need to build smarter.

RedBuilt: A family of brand-name building products... a source for innovative ideas and solutions... a supplier that's simpler to do business with.



ABOUT THIS GUIDE

The RedBuilt™ Open-Web Truss Specifier's Guide is one of several guides that offer technical information and design recommendations for RedBuilt™ products. This guide provides architects, designers, and engineers with information regarding open-web trusses for commercial and custom residential applications.

Product Selection

This guide provides specifiers with technical information about the RedBuilt™ open-web truss product line. However, complex or custom applications can often make specifying the right products in the right places a challenge—especially when you have factors such as span, wind or load-carrying capacity and other design constraints to consider. But whatever your project entails, RedBuilt is here to help. Your local RedBuilt technical representative, along with our Design Center teams, can assist you in choosing the best products and designing the best system for your specific application.

Contact us for help with any of the following:

- Product selection
- Building department calculations
- Complete cost analysis
- System selection (system packages can include horizontal framing, main carrying beams, headers, wall framing, mansard framing, and accessories)

Products for Every Application

In addition to open-web trusses, RedBuilt offers a variety of other engineered lumber products that are ideal for use in commercial and custom residential projects. For more information, contact your RedBuilt technical representative or visit redbuilt.com to download literature for products such as Red-I™ joists and RedLam™ LVL.

Unsurpassed Technical Support

RedBuilt has one of the largest networks of technical representatives in the business. Their services include consultation, computer-assisted design and layout, delivery coordination, and installation review. They can suggest cost-reduction techniques and check special application requirements. In addition, they're backed by a staff of professional engineers who provide comprehensive technical support when needed. Special requests are accommodated wherever practical, and they offer cost analysis, engineering analysis, assistance with building code approvals—even the creation of special product applications for more creative designs. The goal of RedBuilt technical support is to help architects and engineers achieve quality design applications with the most cost-efficient product selection possible.



Our network of technical representatives offers a wide range of services to help guide your projects through planning and construction.

Resource Efficiency

Consider all of the positive attributes of wood when selecting your building material of choice. In addition to its structural properties, high strength-to-weight ratio, and ease of construction, wood is a naturally occurring, renewable resource that requires less energy to produce than steel or concrete. And it sequesters carbon—whether on the stump or in your structure.

Our RedBuilt™ open-web trusses with RedLam™ LVL chords, as well as other RedBuilt™ products, are made with responsibly sourced fiber. Whether you're looking for LEED® certification or simply want to ensure efficient use of raw materials, we can help. By making better use of every tree, RedBuilt produces cost-effective, consistently available engineered wood products that reduce environmental impact. The result is a quality wood product that offers superior strength and reliable performance.

VERIFIED by SCS GLOBAL SERVICES ENVIRONMENTAL PRODUCT DECLARATION BASED ON LCA

DESIGN CENTER SERVICES

Upon request, RedBuilt can provide the following services for the products described in this Open-Web Truss Specifier's Guide:

- A complete design package including layout drawings (placement diagrams) and detailed design calculations.
- Review and analysis of the application.
- Drawings or calculations sealed by a professional engineer.

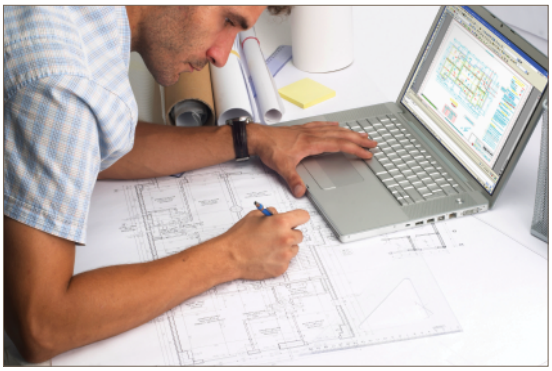

Our technical support team offers professional capabilities in the design and application of all RedBuilt™ products.

Installation Review

Although responsibility for proper installation lies with the contractor-builder, RedBuilt provides detailed suggestions and guidelines for installation. If requested, a RedBuilt representative will visit the site to verify the contractor's understanding of proper installation. RedBuilt professional engineers also are available to help solve jobsite application problems.

Engineering Responsibility Position Statement

RedBuilt is a manufacturer of proprietary structural components.

It employs a staff of professional engineers to aid in the development, manufacture, and marketing of its products. RedBuilt does not replace or accept the responsibility of the design professional of record for any structure.

RedBuilt accepts the delegation of engineering responsibility only for the products it manufactures, provided that the application conditions are specified by the design professional of record, or other responsible party when a design professional is not engaged. RedBuilt provides engineering in the design of its products and does not displace the need on any project for a design professional of record.

HOW TO SPECIFY TRUSSES FOR MAXIMUM ECONOMY

It is in the designer's best interest to specify the most economically efficient materials and ensure that their customers are not paying extra for structural components that are oversized for the given loads. However, specifying a minimum depth truss with the maximum plf loading (as shown in the load tables on pages 6–11) may not be the most economical solution.

Designing to the maximum depth allowed for the application, and not maximizing loads in tables, will produce the most economical solution. Keep this and the following two examples in mind when consulting the load tables in this guide:

Deeper Can Be More Economical

Example:

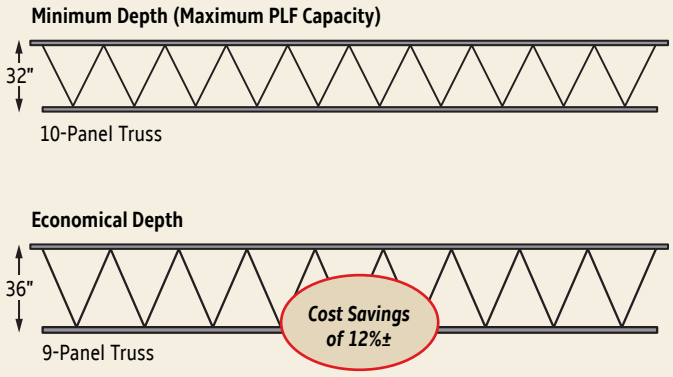

Consider An Alternative Truss Series

Example:

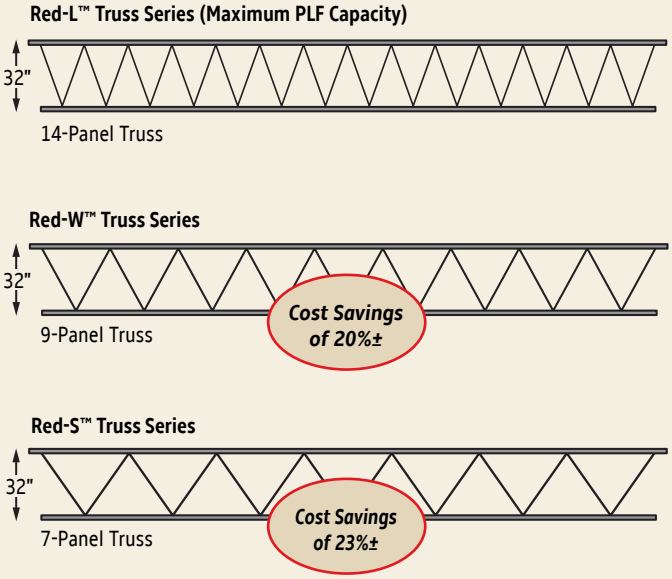

Top chord bearing at each end provides the easiest installation and the most cost-effective truss system. Note that these are general guidelines only and they are not reflective of all applications. Consult your local RedBuilt technical representative to assist you in specifying the most economical truss solutions for your particular applications.

OPEN-WEB TRUSS DESCRIPTIONS

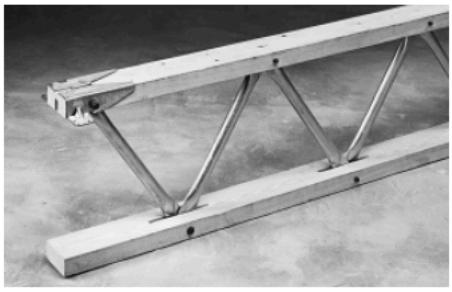

Red-L™ and Red-W™ Trusses

Chords:
- Red-L™ trusses: 1½" x 3½" MSR lumber*
- Red-W™ trusses: 1½" x 4¾" MSR lumber

Webs:
1" and 1⅛" diameter tubular steel members varying in gauge and diameter according to requirements.

Weight:
- Red-L™ trusses: 3.75 to 4.25 lbs/ft
- Red-W™ trusses: 4.5 to 5.25 lbs/ft

Depths:
Minimum depth at wall .....14"
Maximum depth at wall .....50"
Maximum pitched ridge depth .....50"

Any depth between minimum and maximum is available.

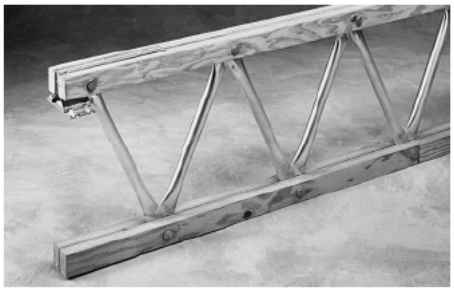

Red-S™ Trusses

Chords:
Double 1½" x 2.3" RedLam™ LVL

Webs:
1", 1¼", and 1½" diameter tubular steel members varying in gauge and diameter according to requirements.

Weight:
4.75 to 5.75 lbs/ft

Depths:
Minimum depth at wall .....16"
Maximum depth at wall .....60"
Maximum pitched ridge depth .....84"

Any depth between minimum and maximum is available.

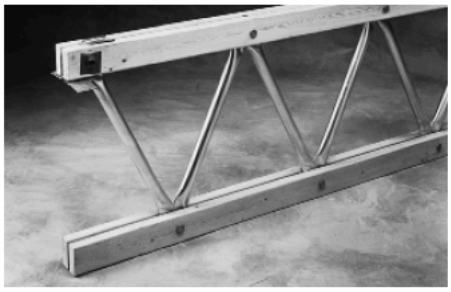

Red-M™ and Red-H™ Trusses

Chords:
- Red-M™ trusses: Double 1½" x 3½" MSR lumber*
- Red-H™ trusses: Double 1½" x 5½" MSR lumber*

Webs:
Up to 2" diameter tubular steel members varying in gauge and diameter according to requirements.

Weight:
- Red-M™ trusses: 8 to 9 lbs/ft
- Red-H™ trusses: 10 to 12 lbs/ft

Depths:	**Red-M™**	**Red-H™**
Minimum depth at wall	20"	24"
Maximum depth at wall	60"	72"
Maximum pitched ridge depth	72"	114"

Any depth between minimum and maximum is available.

Open-web trusses are intended for dry use, untreated applications.

* RedLam™ LVL chords may be available for Red-L,™ Red-M,™ and Red-H™ truss series. Consult your technical representative for availability and limitations.

Building Codes and Product Acceptance: See ICC-ES ESR-1774, L.A. City RR #22614

Truss Profiles

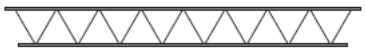

1 Parallel Chord

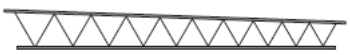

2 Tapered

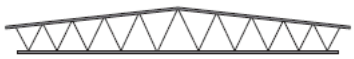

3 Pitched

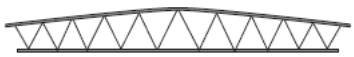

4 Radius Pitched

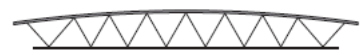

5 Bow String

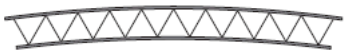

6 Barrel

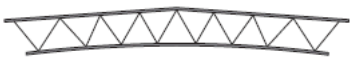

7 Pitched Top Chord/Radius Bottom Chord



8 Scissor

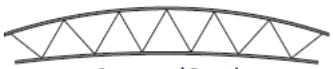

9 Compound Barrel

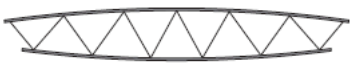

10 Lenticular

Tightest Curvature Available:

Red-L™ and Red-W™ trusses .....52' radius
Red-S™ trusses .....200' radius
Red-M™ trusses..... Camber only
Red-H™ trusses ..... Camber only

Truss Series	Profiles Available									
	1	2	3	4	5	6	7	8	9	10
Red-L™ Red-W™	▪	▪	▪	▪	▪	▪	▪		▪	▪
Red-S™	▪	▪	▪	▪	▪	▪	▪	▪	▪	▪
Red-M™	▪	▪	▪					▪		
Red-H™	▪	▪	▪					▪		

▪ Indicates that the profile is available.

In radius truss applications (Profiles 5, 6, 7, 9, and 10), allowable loads are reduced due to radial stresses. Contact your RedBuilt technical representative for job-specific possibilities.

Maximum top chord slope for Profile 4 (Radius Pitched) is ½:12 for Red-L™ and Red-W™ truss series, and ⅜:12 for Red-S™ truss series.

RED-L™ TRUSS ALLOWABLE UNIFORM LOAD TABLE (PLF) / PARALLEL CHORD

SEE PAGE 4 FOR ECONOMICAL TRUSS DESIGN

Span	Depth													
	14"		16"		18"		20"		22"		24"		26"	
	100% TL / 100% LL	115% TL / 125% TL	100% TL / 100% LL	115% TL / 125% TL	100% TL / 100% LL	115% TL / 125% TL	100% TL / 100% LL	115% TL / 125% TL	100% TL / 100% LL	115% TL / 125% TL	100% TL / 100% LL	115% TL / 125% TL	100% TL / 100% LL	115% TL / 125% TL
14'	292 208	341 370	329 254	383 395	376 323	400 412	380 367	412 429	340	390 422	309	360 385	299	356 386
16'	265 143	306 311	306 190	340 361	341 232	361 370	342 270	366 376	335 318	369 380	338	351 375	305	350 380
18'	215 110	250 271	200 145	286 306	232 180	319 329	309 215	328 333	301 250	332 340	315 278	334 336	301	332 339
20'	184 84	208 229	171 109	245 260	184 139	275 292	203 167	295 298	227 197	297 303	283 226	299 305	291 255	297 310
22'	158 66	177 192	142 84	204 217	160 110	233 252	***177*** 134	260 269	200 155	272 271	220 184	271 276	270 196	275 280
24'	133 52	150 164	133 68	174 189	143 88	199 215	157 106	223 241	173 126	239 251	185 146	247 252	202 167	249 254
26'	106 43	131 137	113 55	152 160	129 70	173 188	136 86	189 210	151 103	213 222	166 123	225 231	***176*** 140	230 236
28'	86 34	111 111	109 45	129 142	118 57	148 158	125 69	163 181	***136*** 86	181 200	151 102	199 214	163 117	212 213
30'		91 91	93 37	114 121	108 47	128 140	121 58	145 155	127 69	158 175	140 81	173 192	150 93	192 202
32'		76 76	***76*** 31	100 102	95 39	113 124	107 48	125 140	118 58	142 155	***127*** 68	155 170	136 78	169 184
34'		63 64		85 85	***83*** 33	101 110	99 41	114 124	***105*** 49	126 136	120 58	138 150	***127*** 67	151 164
36'		55 55		73 73		87 94	***86*** 35	98 102	***97*** 42	108 117	107 50	117 128	114 58	129 140
38'		47 47		62 62		78 80	75 30	86 91	85 36	97 104	92 43	105 115	***97*** 50	116 126
40'		40 41		53 53		69 69		79 86	79 31	87 94	***81*** 37	96 100	94 43	103 114
42'		35 35		46 47		60 60		72 73		78 82	79 32	87 92	***85*** 38	95 103
44'		31 31		40 39		50 52		65 66		70 74		80 85	***77*** 33	82 94
46'				36 36		45 45		58 58		66 69		73 79		79 86
48'				32 32		40 41		52 52		61 62		67 68		73 79
50'						36 36		45 45		54 56		62 62		65 73
52'						32 33		40 39		49 50		57 59		61 63
54'								35 36		43 43		52 53		55 62
56'								32 33		40 40		48 47		54 56
58'										36 36		43 42		48 49
60'										33 33		39 39		46 44

- See page 5 for available depths and profiles. For depths and profiles not shown, contact your RedBuilt technical representative for assistance.
- Red numbers refer to 115% Total Load (TL).

General Notes

- **Values shown demonstrate maximum allowable load capacities based on the following assumptions:**
  - Simple span, uniformly loaded conditions, with provisions for positive drainage (¼:12 slope, minimum) in roof applications.
  - **Span** indicates distance from inside face to inside face of bearing.
  - Top chord no-notch bearing clips with 1¾" bearing. Higher values may be possible with other types of bearing clips.
- Straight line interpolations may be made between depths and spans.
- Values in shaded areas may be increased 7% for repetitive-member use.
- ***Bold italic*** values are controlled by minimum concentrated load analysis of 2,000 lbs. Higher loads are possible where minimum concentrated load analysis is not required by code. Contact your RedBuilt technical representative for assistance.

General Notes continued on page 7

Trusses delivered to the jobsite are custom manufactured to resist only project specific application loads provided by the design professional. Actual trusses may not be able to resist the maximum loads shown in the tables above. For questions regarding actual truss capacity contact your RedBuilt technical representative.

RED-L™ TRUSS ALLOWABLE UNIFORM LOAD TABLE (PLF) / PARALLEL CHORD

Continued from page 6

SEE PAGE 4 FOR ECONOMICAL TRUSS DESIGN

Span	Depth													
	28"		30"		32"		34"		36"		38"		40"	
	100% TL / 100% LL	115% TL / 125% TL	100% TL / 100% LL	115% TL / 125% TL	100% TL / 100% LL	115% TL / 125% TL	100% TL / 100% LL	115% TL / 125% TL	100% TL / 100% LL	115% TL / 125% TL	100% TL / 100% LL	115% TL / 125% TL	100% TL / 100% LL	115% TL / 125% TL
14'	295 / 374	353	294 / 367	324	290 / 365	308	277 / 336	309	262 / 308	300	264 / 318	304	243 / 301	280
16'	303 / 380	347	266 / 359	306	264 / 331	288	265 / 332	305	255 / 288	271	256 / 282	273	240 / 283	275
18'	263 / 339	341	266 / 345	317	261 / 308	279	261 / 314	287	237 / 297	271	239 / 276	250	***231*** / 303	263
20'	270 / 250	303 / 311	285 / 267	298 / 309	239 / 307	287	242 / 327	281	221 / 284	259	219 / 289	264	221 / 274	250
22'	259 / 208	279 / 282	257 / 232	279 / 282	241 / 279	266	233 / 281	259	228 / 281	258	224 / 278	253	223 / 259	236
24'	219 / 185	255 / 257	252 / 190	255 / 260	242 / 211	259 / 263	237 / 228	258 / 264	227 / 263	259	218 / 264	246	213 / 252	246
26'	195 / 158	231 / 235	205 / 175	233 / 242	233 / 177	238 / 239	227 / 198	237 / 242	***221*** / 214	238 / 243	232 / 231	228 / 241	212	230 / 237
28'	175 / 132	216 / 220	214 / 137	215 / 221	216 / 152	220 / 221	216 / 169	218 / 224	218 / 184	222 / 224	***198*** / 195	222 / 221	210	215 / 218
30'	159 / 111	201 / 205	167 / 124	204 / 204	200 / 133	205 / 207	194 / 145	208 / 208	204 / 159	208 / 207	201 / 174	208 / 205	204 / 191	205 / 202
32'	149 / 89	184 / 191	158 / 99	191 / 191	170 / 113	191 / 193	181 / 123	191 / 192	190 / 137	195 / 194	192 / 152	192 / 190	189 / 163	191 / 191
34'	138 / 77	162 / 176	147 / 87	174 / 177	157 / 95	181 / 174	165 / 108	189 / 189	169 / 119	182 / 181	179 / 130	179 / 182	180 / 144	179 / 180
36'	123 / 66	138 / 151	132 / 75	146 / 162	140 / 84	160 / 171	151 / 94	166 / 178	161 / 103	170 / 170	169 / 113	170 / 169	170 / 125	166 / 166
38'	113 / 57	116 / 136	***115*** / 64	134 / 147	127 / 72	144 / 157	136 / 82	152 / 161	144 / 91	161 / 161	152 / 99	161 / 161	159 / 109	157 / 154
40'	102 / 49	110 / 122	110 / 55	122 / 132	117 / 63	130 / 142	125 / 71	139 / 150	***129*** / 79	147 / 151	140 / 87	153 / 151	148 / 95	151 / 149
42'	***92*** / 43	102 / 112	***99*** / 49	108 / 120	107 / 55	114 / 127	114 / 62	125 / 136	121 / 69	129 / 145	128 / 77	141 / 145	133 / 83	142 / 143
44'	***78*** / 38	92 / 97	91 / 43	96 / 109	***96*** / 49	107 / 117	103 / 55	114 / 125	***109*** / 61	121 / 133	116 / 68	129 / 137	121 / 75	131 / 134
46'	77 / 33	84 / 93	***82*** / 38	92 / 100	89 / 43	98 / 106	95 / 48	105 / 114	101 / 54	112 / 121	105 / 60	118 / 128	112 / 66	120 / 127
48'	70 / 30	79 / 86	***73*** / 34	85 / 92	82 / 38	91 / 98	87 / 43	97 / 105	***91*** / 48	102 / 111	98 / 54	108 / 118	103 / 59	113 / 122
50'		72 / 79	69 / 30	78 / 85	***71*** / 34	83 / 86	80 / 39	89 / 96	85 / 43	94 / 103	90 / 48	100 / 108	95 / 52	105 / 115
52'		66 / 73		72 / 78	70 / 31	77 / 84	74 / 34	82 / 89	79 / 39	87 / 95	***83*** / 43	92 / 100	88 / 48	97 / 106
54'		62 / 68		65 / 71		67 / 78	69 / 31	76 / 83	73 / 34	81 / 88	***77*** / 38	86 / 93	82 / 42	90 / 94
56'		57 / 65		62 / 68		69 / 71		72 / 78	68 / 31	78 / 83	72 / 35	81 / 88	76 / 38	86 / 93
58'		55 / 58		57 / 62		62 / 68		68 / 75		73 / 79	67 / 31	77 / 83	71 / 35	82 / 88
60'		52 / 50		55 / 61		60 / 65		64 / 70		68 / 74		71 / 78	66 / 32	75 / 83

- See page 5 for available depths and profiles. For depths and profiles not shown, contact your RedBuilt technical representative for assistance.
- Red numbers refer to 115% Total Load (TL).

General Notes continued from page 6

To size floor trusses:
Check both total load (100% TL) and live load (100% LL). When live load is not shown, total load will control. Total load values limit deflection to L/240. Live load values are based on the **Commercial Floor Deflection Limit** shown on page 35, and assume a nailed floor system. Live load (100% LL) values may be increased with a glue-nailed floor system; contact your RedBuilt technical representative for assistance.

To size roof trusses:
Check the appropriate snow load area (115% TL) or non-snow load area (125% TL) value to determine the maximum allowable total load. Total load (115% TL and 125% TL) values limit truss deflection to L/180.

Consult local codes to verify deflection limits required for specific applications.

Trusses delivered to the jobsite are custom manufactured to resist only project specific application loads provided by the design professional. Actual trusses may not be able to resist the maximum loads shown in the tables above. For questions regarding actual truss capacity contact your RedBuilt technical representative.

RED-W™ TRUSS ALLOWABLE UNIFORM LOAD TABLE (PLF) / PARALLEL CHORD

SEE PAGE 4 FOR ECONOMICAL TRUSS DESIGN

Span	Depth																											
	14"		16"		18"		20"		22"		24"		26"		28"		30"		32"		34"		36"		38"		40"	
	100% TL	115% TL	100% TL	115% TL	100% TL	115% TL	100% TL	115% TL	100% TL	115% TL	100% TL	115% TL	100% TL	115% TL	100% TL	115% TL	100% TL	115% TL	100% TL	115% TL	100% TL	115% TL	100% TL	115% TL	100% TL	115% TL	100% TL	115% TL
	100% LL	125% TL	100% LL	125% TL	100% LL	125% TL	100% LL	125% TL	100% LL	125% TL	100% LL	125% TL	100% LL	125% TL	100% LL	125% TL	100% LL	125% TL	100% LL	125% TL	100% LL	125% TL	100% LL	125% TL	100% LL	125% TL	100% LL	125% TL
14'	380	416	402	427	407	442	414	440	422	445	389	442	383	445	375	432	367	411	337	370	335	362	324	326	318	325	304	342
	258	421	315	438	384	453	404	445		451		454		450		472		464		468		393		346		352		350
16'	322	359	363	374	373	385	380	387	374	388	385	388	380	397	369	390	359	385	338	383	314	383	302	331	299	324	299	325
	190	365	244	374	280	385	316	397		398		399		401		415		401		396		395		361		353		349
18'	270	292	307	329	334	336	334	339	340	348	339	350	***346***	355	353	351	334	354	306	354	301	352	296	344	282	316	269	331
	138	320	184	327	222	336	249	342	292	353	328	355		362	335	359		358		362		364		361		348		358
20'	220	236	258	289	288	299	303	308	305	314	308	316	309	322	315	321	311	321	325	318	303	322	283	325	288	319	276	315
	105	271	139	296	174	297	206	309	236	312	264	315	289	316	304	323		324		327		326		326		324		304
22'	185	208	215	242	243	272	271	273	275	280	280	285	284	289	283	291	283	288	281	295	289	292	287	291	276	293	259	291
	85	230	105	258	132	273	160	277	188	281	212	281	237	289	255	287	279	288	277	294		295		293		293		283
24'	156	180	177	208	206	234	227	251	251	252	253	260	259	257	259	261	265	262	261	267	263	266	262	264	266	265	263	259
	67	182	85	226	103	245	127	252	152	258	174	259	194	264	212	263	232	267	235	267	259	264		267		265		259
26'	127	153	146	177	166	201	191	226	212	236	231	237	237	238	240	240	242	242	245	242	248	241	242	245	244	243	240	238
	53	166	69	192	86	215	104	231	122	231	142	236	162	237	179	239	196	243	216	243	220	243		245		243		238
28'	107	132	125	153	146	174	162	194	179	216	199	219	217	219	219	218	224	220	224	225	231	225	224	226	225	220	222	217
	43	141	57	166	70	188	87	207	102	216	118	216	134	221	149	222	167	223	185	226	202	224	218	226		220		217
30'	88	115	112	133	127	152	141	170	157	188	172	206	189	204	203	204	206	206	209	209	209	206	208	208	209	207	204	202
	35	117	47	144	59	165	71	184	86	203	100	202	111	204	127	201	141	206	158	209	175	206	188	208	208	208		202
32'	74	98	98	116	112	133	122	149	136	164	153	181	166	190	181	191	193	193	192	193	201	193	195	193	195	194	189	191
	30	98	39	127	49	144	59	162	72	177	85	185	95	190	106	193	121	193	137	193	149	193	162	193	178	194	187	191
34'		81	82	104	101	118	115	132	127	147	140	161	150	174	165	180	***172***	177	183	179	189	182	182	183	181	182	180	180
		81	33	111	42	128	51	144	62	159	72	175	82	180	92	179	104	181	117	181	131	182	143	183	159	182	167	180
36'		70		90	90	102	***100***	114	114	127	125	135	134	151	145	163	158	167	***167***	170	***169***	170	170	170	172	170	170	166
		69		93	36	109	44	125	53	138	62	151	71	165	81	169	91	166	100	170	113	170	126	170	142	170	146	166
38'		59		80	***74***	92	***90***	103	102	114	112	125	122	136	130	146	142	158	152	162	160	159	162	160	162	160	159	157
		59		79	31	100	38	112	46	124	54	136	62	148	70	160	78	159	88	160	97	162	109	161	121	160	127	157
40'		50		68		83	82	93	***90***	103	101	113	110	123	***117***	133	128	143	137	148	145	149	153	151	153	152	150	151
		52		68		89	33	101	39	112	47	123	54	133	61	143	69	151	77	149	85	152	95	151	106	151	112	151
42'		45		59		75		84	***82***	93	91	102	***96***	112	108	116	116	129	124	138	132	143	139	143	146	145	143	143
		45		59		78		92	34	102	41	110	47	119	54	131	61	140	68	144	75	145	84	144	94	145	101	143
44'		39		52		67		77	***73***	84	***83***	93	91	100	***97***	110	105	118	113	126	121	135	128	139	135	138	137	136
		39		52		68		83	30	92	36	102	42	111	47	120	54	128	60	137	67	137	75	137	82	135	91	136
46'		35		46		59		70		78	76	86	83	93	89	99	97	108	104	116	110	123	117	130	124	130	130	128
		35		46		59		74		85	32	93	37	101	42	109	48	117	53	126	59	131	66	130	73	132	81	128
48'		31		40		52		64		67		74	76	83	83	91	89	99	95	106	101	113	108	120	114	126	120	125
		31		40		51		66		78		85	33	93	38	100	42	108	48	116	53	123	59	126	65	126	73	123
50'				36		46		58		65		71		79	76	85	82	92	***87***	98	94	105	99	108	105	117	110	119
				36		46		58		71		79		86	34	92	38	100	43	106	48	111	53	117	59	120	65	117
52'				33		42		49		59		67		73	70	79	76	85	81	91	86	96	92	102	97	108	102	113
				33		42		52		63		72		79	30	81	34	92	39	97	43	105	47	111	53	114	58	113
54'						37		44		55		60		68		73	***69***	78	75	84	80	89	85	95	90	99	95	106
						38		45		56		66		73		79	31	85	35	91	39	97	43	103	47	109	53	107
56'						34		42		50		57		64		68		75	70	80	75	86	79	91	83	96	88	101
						34		38		50		61		69		76		82	31	86	35	93	39	98	43	103	48	102
58'						30		37		47		53		60		65		69		75	***69***	80	74	85	78	90	82	95
						30		38		42		55		61		69		75		81	32	87	36	92	40	97	44	100
60'								33		42		50		52		58		65		70		75	69	79	73	84	77	89
								33		42		50		55		63		71		76		81	32	83	36	89	39	95

- See page 5 for available depths and profiles. For depths and profiles not shown, contact your RedBuilt technical representative for assistance.
- Red numbers refer to 115% Total Load (TL).

General Notes

- **Values shown demonstrate maximum allowable load capacities based on the following assumptions:**
  - Simple span, uniformly loaded conditions, with provisions for positive drainage (¼:12 slope, minimum) in roof applications.
  - **Span** indicates distance from inside face to inside face of bearing.
  - Top chord no-notch bearing clips with 2¾" bearing for Red-W™ trusses and standard bearing clips for Red-S™ trusses. Higher values may be possible with other types of bearing clips.
- Straight line interpolations may be made between depths and spans.
- Values in shaded areas may be increased for repetitive-member use as follows: 7% for Red-W™ trusses and 4% for Red-S™ trusses.
- ***Bold italic*** values are controlled by minimum concentrated load analysis of 2,000 lbs. Higher loads are possible where minimum concentrated load analysis is not required by code. Contact your RedBuilt technical representative for assistance.

General Notes continued on page 9

Trusses delivered to the jobsite are custom manufactured to resist only project specific application loads provided by the design professional. Actual trusses may not be able to resist the maximum loads shown in the tables above. For questions regarding actual truss capacity contact your RedBuilt technical representative.

RED-S™ TRUSS ALLOWABLE UNIFORM LOAD TABLE (PLF) / PARALLEL CHORD

SEE PAGE 4 FOR ECONOMICAL TRUSS DESIGN

Span	Depth																											
	16"		18"		20"		22"		24"		26"		28"		30"		32"		34"		36"		38"		40"		42"	
	100% TL / 100% LL	115% TL / 125% TL	100% TL / 100% LL	115% TL / 125% TL	100% TL / 100% LL	115% TL / 125% TL	100% TL / 100% LL	115% TL / 125% TL	100% TL / 100% LL	115% TL / 125% TL	100% TL / 100% LL	115% TL / 125% TL	100% TL / 100% LL	115% TL / 125% TL	100% TL / 100% LL	115% TL / 125% TL	100% TL / 100% LL	115% TL / 125% TL	100% TL / 100% LL	115% TL / 125% TL	100% TL / 100% LL	115% TL / 125% TL	100% TL / 100% LL	115% TL / 125% TL	100% TL / 100% LL	115% TL / 125% TL
16'	399 / 262	459 / 499	465 / 334	528 / 572	487 / 410	558 / 564	496 / 488	570 / 566	464 /	533 / 590	467 /	516 / 565	416 /	478 / 531	434 /	463 / 502	403 /	463 / 501	363 /	417 / 432	348 /	419 / 458	347 /	399 / 433	312 /	359 / 387	317 /	362 / 393
18'	325 / 189	376 / 411	379 / 243	436 / 474	433 / 300	498 / 531	453 / 357	507 / 541	466 / 425	553 / 567	433 /	496 / 520	406 /	464 / 511	417 /	449 / 495	370 /	445 / 462	390 /	423 / 460	364 /	417 / 453	328 /	378 / 394	311 /	354 / 386	312 /	380 / 413
20'	279 / 140	321 / 349	***320*** / 178	367 / 399	359 / 221	413 / 449	387 / 273	449 / 488	416 / 318	479 / 509	414 / 375	501 / 514	388 / 382	457 / 484	373 /	427 / 464	377 /	423 / 467	381 /	409 / 444	358 /	410 / 425	333 /	384 / 417	315 /	381 / 393	287 /	360 / 391
22'	233 / 107	266 / 289	***264*** / 137	286 / 333	***278*** / 170	314 / 375	334 / 207	380 / 417	365 / 249	422 / 456	376 / 287	438 / 466	386 / 330	443 / 467	375 / 374	429 / 467	371 /	423 / 464	345 /	397 / 426	330 /	382 / 438	315 /	363 / 395	331 /	350 / 385	287 /	354 / 385
24'	196 / 84	226 / 246	219 / 106	253 / 281	***250*** / 133	288 / 313	***279*** / 162	320 / 346	309 / 194	351 / 383	338 / 228	388 / 422	355 / 261	408 / 430	354 / 297	406 / 431	342 / 332	397 / 429	339 / 338	390 / 422	318 /	368 / 399	318 /	373 / 393	296 /	338 / 371	291 /	335 / 363
26'	***164*** / 66	192 / 208	***190*** / 85	220 / 237	216 / 105	247 / 269	240 / 129	276 / 297	264 / 154	303 / 326	288 / 182	331 / 360	312 / 211	359 / 390	329 / 240	382 / 397	325 / 268	375 / 399	326 / 283	376 / 403	321 / 305	370 / 402	308 /	355 / 385	295 /	341 / 369	294 /	331 / 363
28'	***131*** / 52	166 / 169	165 / 68	190 / 207	184 / 85	214 / 233	207 / 105	238 / 259	***225*** / 126	262 / 285	249 / 146	286 / 311	269 / 174	310 / 337	289 / 197	334 / 363	311 / 222	355 / 373	317 / 246	358 / 377	313 / 261	358 / 377	303 / 281	348 / 374	301 /	349 / 377	***286*** /	324 / 361
30'	107 / 43	137 / 137	***139*** / 56	166 / 179	161 / 70	187 / 203	179 / 86	207 / 223	197 / 102	227 / 248	217 / 121	249 / 268	235 / 139	270 / 291	252 / 162	291 / 316	271 / 183	312 / 339	287 / 205	330 / 347	298 / 230	345 / 347	293 / 241	337 / 352	298 / 261	343 / 352	281 /	324 / 344
32'	***88*** / 35	114 / 114	115 / 46	146 / 149	143 / 58	164 / 178	159 / 71	182 / 198	175 / 84	201 / 218	187 / 101	219 / 238	207 / 117	238 / 256	223 / 134	256 / 278	236 / 152	274 / 298	255 / 172	293 / 318	271 / 187	311 / 331	281 / 204	324 / 330	273 / 224	316 / 330	274 / 241	315 / 323
34'		95 / 91	96 / 38	124 / 124	***120*** / 48	145 / 157	141 / 59	162 / 176	152 / 71	178 / 193	167 / 84	194 / 211	***180*** / 98	211 / 229	195 / 113	227 / 247	209 / 128	243 / 264	***221*** / 143	259 / 282	240 / 163	276 / 299	254 / 176	292 / 309	267 / 191	303 / 307	273 / 206	302 / 301
36'		80 / 80	80 / 32	104 / 104	102 / 41	129 / 133	***125*** / 50	144 / 157	***137*** / 60	159 / 173	148 / 71	173 / 188	160 / 83	188 / 204	176 / 96	202 / 220	189 / 108	217 / 236	199 / 123	232 / 250	214 / 137	246 / 266	227 / 149	261 / 283	239 / 162	275 / 290	251 / 179	285 / 286
38'		69 / 67		90 / 89	87 / 35	113 / 113	107 / 43	129 / 139	***123*** / 51	143 / 155	132 / 61	151 / 169	145 / 71	164 / 183	155 / 82	178 / 197	168 / 93	195 / 210	179 / 106	208 / 224	192 / 118	220 / 240	200 / 132	234 / 253	215 / 142	247 / 264	226 / 154	258 / 268
40'		59 / 59		77 / 76	74 / 30	96 / 97	92 / 37	117 / 120	110 / 44	129 / 139	119 / 52	140 / 152	129 / 61	152 / 164	139 / 71	164 / 177	***151*** / 80	176 / 190	***160*** / 91	188 / 200	174 / 102	200 / 215	184 / 114	211 / 228	193 / 126	223 / 241	204 / 136	233 / 254
42'		51 / 51		66 / 66		84 / 84	***79*** / 32	104 / 104	96 / 38	116 / 125	110 / 45	127 / 137	120 / 53	138 / 149	126 / 61	149 / 160	***138*** / 70	156 / 172	148 / 79	169 / 184	157 / 88	177 / 195	167 / 97	192 / 206	176 / 108	201 / 218	185 / 118	213 / 230
44'		45 / 45		58 / 57		73 / 73		90 / 90	***83*** / 33	106 / 109	98 / 39	115 / 125	***105*** / 46	126 / 137	117 / 53	134 / 147	123 / 61	145 / 158	135 / 69	154 / 168	144 / 77	165 / 179	148 / 86	174 / 188	***160*** / 95	184 / 200	168 / 105	193 / 211
46'		39 / 39		51 / 51		64 / 64		79 / 79		96 / 96	87 / 35	106 / 114	100 / 40	114 / 124	108 / 47	123 / 135	116 / 53	133 / 143	124 / 60	142 / 154	130 / 67	151 / 164	135 / 75	160 / 174	147 / 83	169 / 184	155 / 91	178 / 192
48'		35 / 35		45 / 45		57 / 57		68 / 70		84 / 84	***76*** / 31	98 / 101	89 / 36	106 / 115	99 / 41	114 / 124	105 / 47	121 / 133	113 / 53	130 / 142	121 / 59	139 / 151	128 / 66	147 / 160	135 / 73	155 / 169	140 / 80	163 / 177
50'		31 / 31		40 / 40		50 / 50		62 / 60		74 / 74		88 / 88	79 / 32	98 / 104	91 / 37	105 / 114	98 / 42	113 / 123	105 / 47	120 / 131	***110*** / 53	128 / 139	118 / 58	135 / 147	123 / 65	143 / 154	130 / 71	151 / 162
52'				35 / 35		45 / 45		55 / 55		67 / 67		79 / 79		90 / 93	***81*** / 33	97 / 106	91 / 37	104 / 113	97 / 42	111 / 121	103 / 47	118 / 128	109 / 52	125 / 136	115 / 58	132 / 143	120 / 64	139 / 151
54'				32 / 32		40 / 40		49 / 48		58 / 60		71 / 70		83 / 83		86 / 96	83 / 33	97 / 105	90 / 38	103 / 112	95 / 42	110 / 119	101 / 47	116 / 124	107 / 52	122 / 133	112 / 57	129 / 140
56'						36 / 36		44 / 44		53 / 53		64 / 64		74 / 74		84 / 86	75 / 30	90 / 98	83 / 34	96 / 104	89 / 38	102 / 111	94 / 42	108 / 117	99 / 47	113 / 123	104 / 51	119 / 130
58'						32 / 32		40 / 40		48 / 48		56 / 57		66 / 67		78 / 77		83 / 90	77 / 31	89 / 97	83 / 34	95 / 103	88 / 38	101 / 109	92 / 42	106 / 116	97 / 47	111 / 122
60'								36 / 36		43 / 44		51 / 50		61 / 61		71 / 70		74 / 81		84 / 91	77 / 31	89 / 97	82 / 35	94 / 102	86 / 39	99 / 108	90 / 43	105 / 114
62'								33 / 33		40 / 40		44 / 47		54 / 54		64 / 64		70 / 74		78 / 83		83 / 90	77 / 32	88 / 96	81 / 35	93 / 101	85 / 38	98 / 107

- See page 5 for available depths and profiles. For depths and profiles not shown, contact your RedBuilt technical representative for assistance.
- Red numbers refer to 115% Total Load (TL).

General Notes continued from page 8

To size floor trusses:
Check both total load (100% TL) and live load (100% LL). When live load is not shown, total load will control. Total load values limit deflection to L/240. Live load values are based on the **Commercial Floor Deflection Limit** shown on page 35, and assume a nailed floor system. Live load (100% LL) values may be increased with a glue-nailed floor system; contact your RedBuilt technical representative for assistance.

To size roof trusses:
Check the appropriate snow load area (115% TL) or non-snow load area (125% TL) value to determine the maximum allowable total load. Total load (115% TL and 125% TL) values limit truss deflection to L/180.

Consult local codes to verify deflection limits required for specific applications.

Trusses delivered to the jobsite are custom manufactured to resist only project specific application loads provided by the design professional. Actual trusses may not be able to resist the maximum loads shown in the tables above. For questions regarding actual truss capacity contact your RedBuilt technical representative.

RED-M™ TRUSS ALLOWABLE UNIFORM LOAD TABLE (PLF) / PARALLEL CHORD

SEE PAGE 4 FOR ECONOMICAL TRUSS DESIGN

	Depth																													
	20"		22"		24"		26"		28"		30"		32"		34"		36"		38"		40"		42"		44"		46"	
	100% TL	115% TL	100% TL	115% TL	100% TL	115% TL	100% TL	115% TL	100% TL	115% TL	100% TL	115% TL	100% TL	115% TL	100% TL	115% TL	100% TL	115% TL	100% TL	115% TL	100% TL	115% TL	100% TL	115% TL	100% TL	115% TL	100% TL	115% TL	100% TL	115% TL
Span	100% LL	125% TL	100% LL	125% TL	100% LL	125% TL	100% LL	125% TL	100% LL	125% TL	100% LL	125% TL	100% LL	125% TL	100% LL	125% TL	100% LL	125% TL	100% LL	125% TL	100% LL	125% TL	100% LL	125% TL	100% LL	125% TL	100% LL	125% TL	100% LL	125% TL
24'	292	327	330	369	368	406	393	449	412	449	409	457	401	455	406	455	370	455	386	456	366	434	367	456	347	437	356	436		
	183	348	226	390	266	433	311	461	357	476	396	479		486		480		480		468		475		470		467		464		
26'	251	278	277	313	315	345	347	383	366	419	386	424	388	433	384	431	377	424	384	423	368	417	347	432	340	417	332	414		
	147	294	181	328	218	365	251	403	290	437	329	436	371	447		448		437		452		440		439		428		438		
28'	215	235	***239***	271	269	301	299	330	322	362	351	391	369	402	368	412	365	404	352	400	349	400	363	391	339	391	***363***	392		
	119	255	148	286	177	316	209	350	239	383	272	400	305	402	344	409		420		416		417		420		413		407		
30'	186	206	208	231	235	260	261	285	283	312	303	341	331	367	349	381	348	381	348	380	346	379	336	377	330	374	309	372		
	99	224	121	245	146	277	172	303	198	333	227	360	255	381	285	386	315	387	343	386		392		379		382		380		
32'	166	185	185	206	203	229	226	251	250	274	271	299	290	319	311	344	329	355	335	356	331	364	329	364	324	360	313	348		
	82	195	101	220	121	244	144	267	166	293	190	317	215	342	238	361	263	364	288	360	318	361		364		360		357		
34'	148	164	164	181	183	202	200	223	218	247	240	263	253	281	270	305	295	324	314	331	303	340	319	344	314	334	303	329		
	68	173	85	196	102	216	122	237	141	259	161	279	182	299	204	324	225	340	247	342	272	346	297	339		340		334		
36'	133	146	148	162	160	178	176	199	196	216	211	233	226	255	244	272	261	290	277	304	291	316	305	322	311	319	310	313		
	58	155	72	173	86	192	103	211	119	229	137	250	155	270	174	289	193	301	212	322	235	325	255	320	279	319	301	311		
38'	118	131	133	148	147	161	162	176	178	190	188	210	199	226	220	242	234	257	249	277	259	289	278	305	293	296	298	293		
	49	141	61	155	74	175	88	191	103	206	118	218	134	241	150	259	166	273	184	293	202	305	217	301	239	295	262	295		
40'	105	119	118	133	131	147	144	159	158	173	167	193	183	201	196	215	209	235	224	249	237	264	249	278	262	284	275	277		
	42	127	52	141	64	157	76	172	89	189	103	205	116	219	130	230	144	249	159	264	175	279	188	284	204	283	225	279		
42'	91	110	109	121	121	135	132	145	143	159	155	170	167	183	180	202	189	209	200	226	215	239	229	249	239	261	253	267		
	36	115	45	129	55	142	66	155	77	170	89	178	102	200	114	211	127	226	140	234	154	253	166	264	180	266	195	261		
44'	79	99	99	110	110	122	122	135	130	144	141	158	153	170	162	179	174	190	181	204	196	218	206	230	216	241	227	247		
	32	103	39	116	48	128	58	142	67	153	78	169	89	181	100	186	111	205	123	218	134	223	145	244	160	253	172	249		
46'		90	86	101	101	111	110	122	121	133	129	140	140	153	148	161	161	171	170	188	180	199	189	210	198	221	208	231		
		90	34	107	42	120	50	129	59	142	68	153	78	159	88	176	99	188	109	199	120	206	132	222	140	234	154	237		
48'		80	76	93	93	102	102	111	111	122	121	132	127	141	136	153	146	163	157	173	166	183	176	192	183	199	191	213		
		80	30	98	37	110	44	118	52	132	61	141	69	153	78	160	87	171	97	184	107	191	116	204	125	214	137	222		
50'		70		86	82	95	94	104	102	112	111	123	119	130	129	139	137	150	144	159	154	169	160	179	170	186	180	196		
		70		88	33	101	39	111	46	118	54	129	61	138	69	144	77	161	86	162	95	181	104	189	113	193	123	208		
52'		63		78		89	87	96	95	104	102	111	111	120	118	132	125	138	135	141	140	158	149	164	156	174	165	181		
		63		78		92	35	103	41	109	48	118	55	130	62	136	69	147	77	157	85	163	94	174	102	185	110	194		
54'		56		70		82	78	89	88	96	95	103	101	115	109	119	118	130	125	138	132	145	138	152	148	161	153	167		
		56		70		86	31	96	37	104	43	113	49	118	56	130	62	136	69	143	77	152	84	161	91	169	100	177		
56'		51		63		76		83	82	90	89	94	96	103	102	114	109	117	116	129	122	136	129	141	135	148	143	158		
		51		63		76		87	33	97	39	105	44	113	50	120	56	125	63	135	69	144	76	145	83	158	89	165		
58'		46		57		69		75	75	85	83	91	90	98	95	106	102	113	108	118	114	126	121	133	126	139	133	146		
		46		57		68		82	30	90	35	97	40	104	45	113	51	118	57	123	63	131	69	139	75	150	81	153		
60'		41		52		63		73		79	77	85	83	90	90	99	95	102	101	111	107	118	113	125	119	129	124	138		
		41		52		63		75		80	32	90	36	99	41	101	46	113	51	116	57	124	63	132	69	138	75	146		
62'		37		47		57		68		75		80	78	85	83	92	89	97	94	106	100	110	106	116	111	122	117	127		
		37		47		57		68		79		84	33	91	37	99	42	105	47	109	52	115	57	123	62	129	68	137		
64'		34		43		52		62		67		75	74	81	79	88	83	92	89	99	94	105	98	110	104	116	110	122		
		34		43		52		62		73		80	30	85	34	91	38	97	43	103	47	111	52	114	57	123	62	126		
66'		31		39		47		57		65		70		77	74	81	79	87	84	93	89	96	94	103	99	109	104	113		
		31		39		47		57		67		75		81	31	83	35	91	39	97	43	104	48	108	52	113	57	117		
68'				36		43		50		61		67		73		77	73	83	79	87	84	93	89	97	93	102	97	108		
				36		43		52		61		70		76		83	32	88	36	93	40	94	44	99	48	109	52	113		
70'				33		40		45		56		64		67		72		78	75	79	79	84	84	92	88	95	93	100		
				33		40		48		56		66		71		76		82	33	86	37	93	40	98	44	101	48	108		

- See page 5 for available depths and profiles. For depths and profiles not shown, contact your RedBuilt technical representative for assistance.
- For spans over 70 feet, see page 32 or contact your RedBuilt technical representative.
- Red numbers refer to 115% Total Load (TL).

General Notes

- **Values shown demonstrate maximum allowable load capacities based on the following assumptions:**
  - Simple span, uniformly loaded conditions, with provisions for positive drainage (¼:12 slope, minimum) in roof applications.
  - **Span** indicates distance from inside face to inside face of bearing.
  - Top chord **Z** bearing clips for Red-M™ and Red-H™ trusses. Higher values may be possible with other types of bearing clips.
- Straight line interpolations may be made between depths and spans.
- ***Bold italic*** values are controlled by minimum concentrated load analysis of 2,000 lbs. Higher loads are possible where minimum concentrated load analysis is not required by code. Contact your RedBuilt technical representative for assistance.

General Notes continued on page 11

Trusses delivered to the jobsite are custom manufactured to resist only project specific application loads provided by the design professional. Actual trusses may not be able to resist the maximum loads shown in the tables above. For questions regarding actual truss capacity contact your RedBuilt technical representative.

RED-H™ TRUSS ALLOWABLE UNIFORM LOAD TABLE (PLF) / PARALLEL CHORD

SEE PAGE 4 FOR ECONOMICAL TRUSS DESIGN

Span	Depth																											
	24"		27"		30"		33"		36"		39"		42"		45"		48"		51"		54"		57"		60"		63"	
	100% TL / 100% LL	115% TL / 125% TL	100% TL / 100% LL	115% TL / 125% TL	100% TL / 100% LL	115% TL / 125% TL	100% TL / 100% LL	115% TL / 125% TL	100% TL / 100% LL	115% TL / 125% TL	100% TL / 100% LL	115% TL / 125% TL	100% TL / 100% LL	115% TL / 125% TL	100% TL / 100% LL	115% TL / 125% TL	100% TL / 100% LL	115% TL / 125% TL	100% TL / 100% LL	115% TL / 125% TL	100% TL / 100% LL	115% TL / 125% TL	100% TL / 100% LL	115% TL / 125% TL	100% TL / 100% LL	115% TL / 125% TL
30'	***327*** 187	365 388	384 244	423 452	***436*** 308	462 464	448 372	470 470	439 436	471 481	426	468 495	420	470 479	411	480 484	393	442 487	384	440 484	370	415 451	349	398 442	331	392 422	329	375 416
32'	290 156	322 341	336 204	376 395	***384*** 259	427 434	428 314	439 440	424 370	446 448	421	444 444	422	445 454	400	430 453	395	453 453	375	420 448	367	429 457	354	392 430	334	388 435	325	364 395
34'	***256*** 132	284 303	299 173	332 349	342 219	381 401	383 268	412 414	397 317	415 423	396 368	420 427	404	422 429	401	424 431	379	420 429	388	428 432	360	398 431	350	406 434	335	389 408	329	367 410
36'	228 112	254 267	267 147	297 314	306 187	339 359	341 230	381 394	380 272	394 399	383 317	397 401	387 365	399 404	396	398 406	386	401 409	366	401 403	362	406 411	342	383 407	325	386 406	325	369 394
38'	206 96	229 243	240 126	266 282	275 160	305 324	302 197	342 364	344 236	370 373	***363*** 276	374 379	373 317	376 391	375 357	379 389	363	385 388	366	382 390	347	387 391	349	382 391	340	380 386	304	362 384
40'	186 83	207 222	217 109	238 254	***245*** 138	275 291	***276*** 171	311 328	***298*** 206	339 357	341 239	356 360	350 276	358 364	356 314	361 366	356 354	362 367	352	364 371	356	366 373	332	362 373	337	363 370	313	351 367
42'	169 72	187 196	197 95	216 228	224 121	250 265	250 149	278 298	281 179	313 332	311 209	339 342	327 240	338 344	332 277	343 350	337 310	346 351	342	343 352	339	349 351	316	350 351	313	350 355	326	348 358
44'	151 62	169 182	178 83	195 209	204 106	225 239	223 130	258 273	257 158	286 303	284 185	315 325	308 212	324 328	321 243	327 331	327 275	321 333	326 309	331 338	329	335 338	328	333 338	313	337 336	300	330 340
46'	137 55	157 166	164 73	182 191	188 93	208 219	211 115	232 249	237 139	262 277	258 164	288 305	282 190	308 313	304 215	314 318	309 243	315 319	313 274	317 320	300	318 319	311	320 324	314	322 327	300	324 326
48'	121 48	144 153	151 64	168 177	173 82	192 201	194 102	213 226	215 123	237 250	238 145	264 276	260 168	288 298	281 191	298 302	295 213	300 304	299 247	304 308	300 271	304 307	295	305 309	301	306 312	298	309 310
50'	107 43	132 140	139 57	155 164	158 73	176 185	178 91	191 211	198 110	220 230	216 130	244 258	234 150	263 282	259 172	284 290	278 193	290 293	287 214	289 295	289 244	289 295	290 265	306 304	291 286	293 298	284	295 296
52'	95 38	123 124	126 51	142 151	146 65	163 170	165 81	183 192	183 98	202 216	203 116	225 237	221 135	247 259	240 154	264 277	258 174	278 280	274 194	281 281	276 214	291 284	279 239	290 286	278 260	282 284	280 262	284 283
54'	85 34	112 112	114 45	130 141	136 58	152 158	153 72	166 180	170 88	186 200	187 104	210 218	***205*** 122	226 241	222 140	245 261	238 157	267 270	255 175	269 272	267 194	276 273	***266*** 220	268 273	270 236	272 276	267 257	272 274
56'	76 30	100 99	102 41	124 131	126 52	137 148	139 65	158 168	160 79	173 184	175 94	193 204	190 110	209 224	207 126	229 242	223 143	244 259	241 160	256 261	254 176	260 261	259 194	271 265	259 217	261 265	261 234	264 262
58'		90 90	91 37	116 120	117 47	129 139	133 59	148 156	139 71	164 173	162 85	174 191	179 99	198 208	189 115	211 228	208 129	230 243	223 145	245 252	239 161	246 254	249 178	253 254	251 194	255 254	251 215	254 252
60'		82 82	83 33	108 109	105 42	121 131	124 53	138 143	137 65	153 162	151 77	168 176	167 90	185 191	181 104	201 211	190 118	214 227	208 133	228 244	222 147	245 244	237 163	244 246	243 178	243 247	241 194	246 240
62'		74 74	71 30	99 99	97 39	117 122	117 48	130 137	129 59	144 150	142 70	157 166	156 82	174 179	168 94	185 194	181 108	198 210	191 121	216 228	208 135	228 237	221 148	232 238	233 163	234 238	234 176	237 234
64'		66 68		90 90	84 35	108 115	108 44	122 128	121 54	135 139	132 64	148 155	146 75	161 171	159 86	175 185	171 98	189 196	179 110	203 213	195 124	215 224	207 135	226 228	219 148	218 229	225 164	228 224
66'		62 62		82 82	80 32	102 105	97 40	114 121	115 49	127 131	127 58	137 145	136 68	151 158	148 79	164 172	160 90	174 184	170 102	187 200	184 113	203 216	196 125	214 223	206 136	221 220	216 149	221 218
68'		57 57		75 75		97 96	91 37	106 114	108 45	117 125	118 53	131 136	129 63	143 149	140 72	148 164	152 82	164 177	162 93	179 188	172 104	191 204	184 115	202 215	195 125	213 216	205 137	215 210
70'		52 52		69 69		86 89	84 34	103 106	95 41	112 119	112 49	121 130	122 58	133 141	131 67	148 153	143 76	157 163	151 86	168 175	162 96	181 192	173 106	190 203	183 117	201 207	193 127	205 206

- See page 5 for available depths and profiles. For depths and profiles not shown, contact your RedBuilt technical representative for assistance.
- For spans over 70 feet, see page 32 or contact your RedBuilt technical representative.
- Red numbers refer to 115% Total Load (TL).

General Notes continued from page 10

To size floor trusses:
Check both total load (100% TL) and live load (100% LL). When live load is not shown, total load will control. Total load values limit deflection to L/240. Live load values are based on the **Commercial Floor Deflection Limit** shown on page 35, and assume a nailed floor system. Live load (100% LL) values may be increased with a glue-nailed floor system; contact your RedBuilt technical representative for assistance.

To size roof trusses:
Check the appropriate snow load area (115% TL) or non-snow load area (125% TL) value to determine the maximum allowable total load. Total load (115% TL and 125% TL) values limit truss deflection to L/180.

Consult local codes to verify deflection limits required for specific applications.

Trusses delivered to the jobsite are custom manufactured to resist only project specific application loads provided by the design professional. Actual trusses may not be able to resist the maximum loads shown in the tables above. For questions regarding actual truss capacity contact your RedBuilt technical representative.

RED-L™ AND RED-W™ TRUSS DETAILS

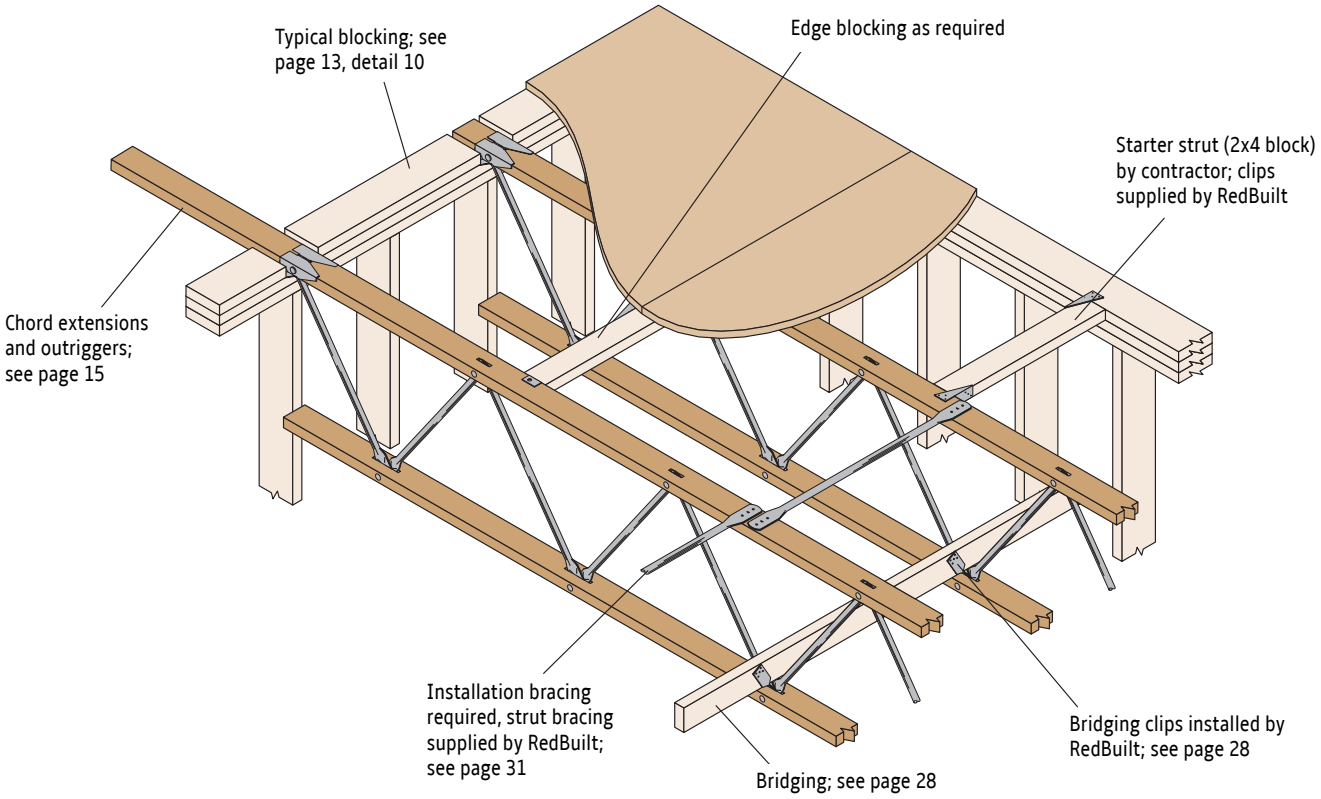

1 Beveled Plate Requirements

Beveled bearing plates are required for trusses with sloped top chords.

Beveled plates serve two functions:

1. Provide proper bearing for the bearing clip.
2. Avoid interference between the top chord and the bearing plate.

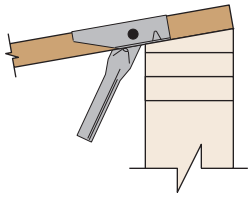

A beveled plate, to suit roof slope, is required at all common bearings and cantilevered bearings.

Slopes Requiring a Beveled Plate

Bearing Condition	No-Notch, U-Clip		
	2x8	2x6	2x4
Low end	>¼:12	>⅜:12	>½:12
High end	>⅜:12	>⅜:12	>½:12
Cantilever	Beveled plate required at all slopes		
Common			

- See detail 4 for flush mount bearing clip requirements.

2 Top Bearing

No-Notch Clip

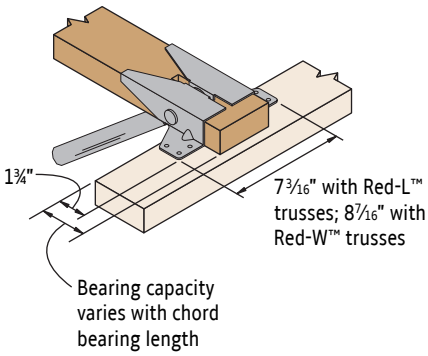

Pre-notched plate not required

3 Bottom Bearing

U-Clip

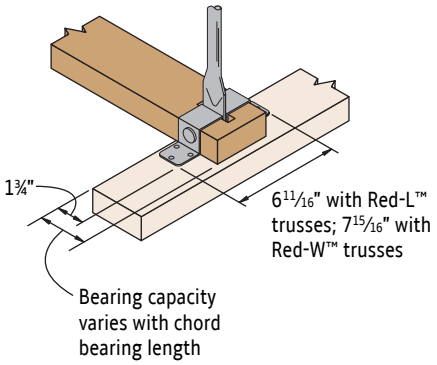

4 Top Bearing

Flush-Mount Clip (Heavy Duty)

Specify for high axial load applications

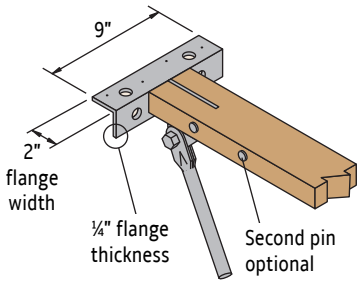

Maximum slope is ½:12. Contact your RedBuilt technical representative for truss depths less than 21". See pages 24–26 for additional information on Wind or Seismic Connections.

See page 22 for bearing reaction capacities

5 Top Chord Bearing
No-Notch Clip

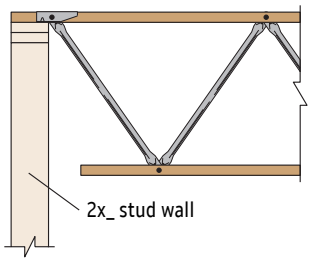

6 Top Chord Bearing on Ledger
No-Notch Clip

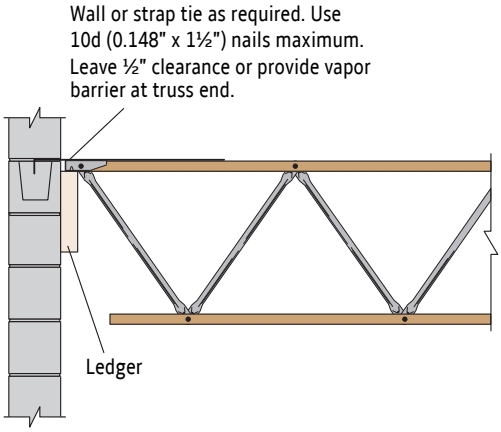

See page 24 for compatible strap ties

7 Bearing Block at Masonry Wall

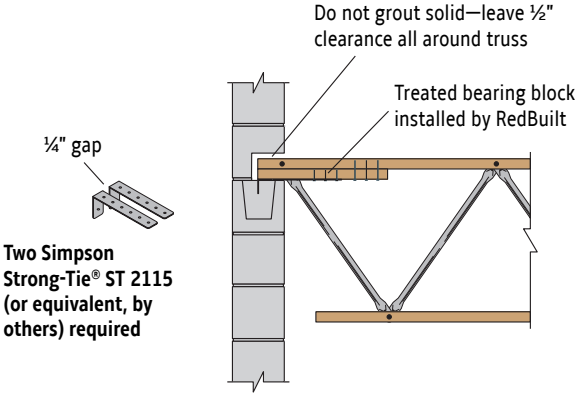

Blocking not shown for clarity

8 Top Chord Bearing
Flush-Mount Bearing Clip (Dropped and Non-Dropped)

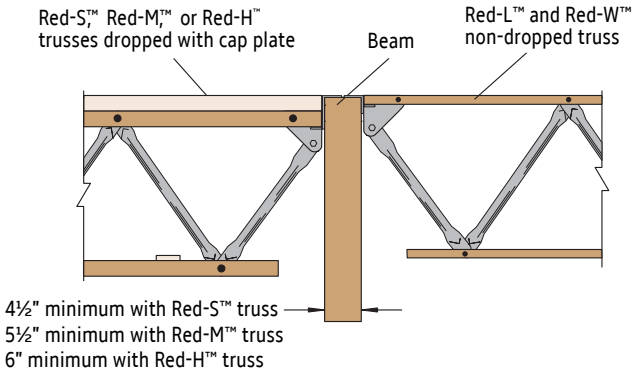

See page 25 for axial tension or compression capacity information

9 Red-I™ Joist Butting with Top Chord Bearing Truss

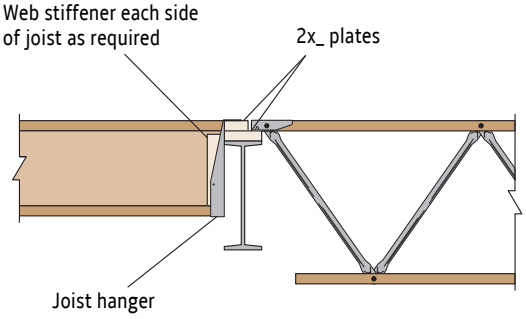

Option: Bearing clips may also be welded directly to steel beam

10 Typical Top Chord Bearing and Blocking
No-Notch Clip

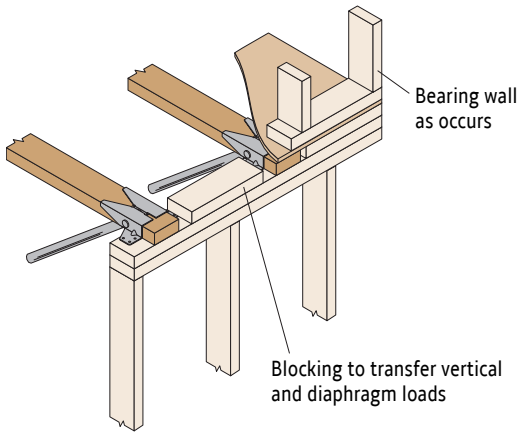

11 Red-W™ Truss Top Chord Bearing
Lateral No-Notch Clip

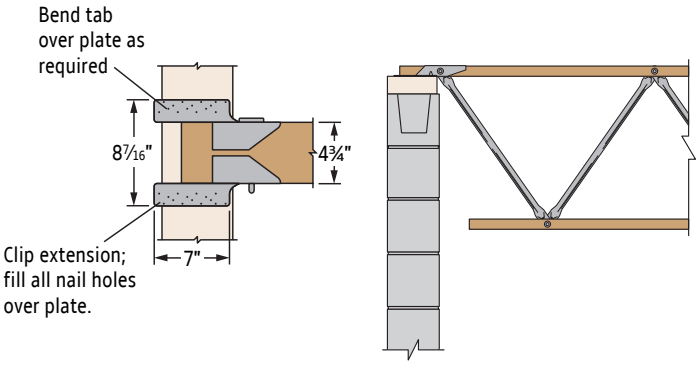

See page 26 for lateral load capacity and for Red-L™ and Red-W™ alternate detail

12 Top Chord Bearing on Steel Beam
No-Notch Clip

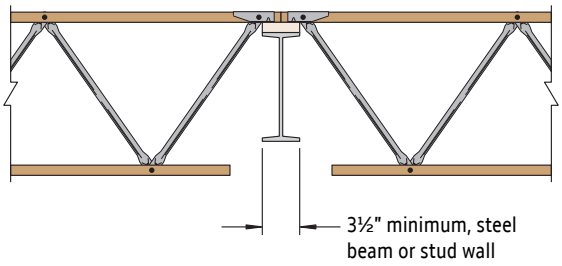

2,860 lbs reaction capacity at 100% duration of load; higher reactions require more bearing length

Option: Bearing clips may also be welded directly to steel beam

13 Top Chord Bearing Truss Butting with Red-S™ Truss

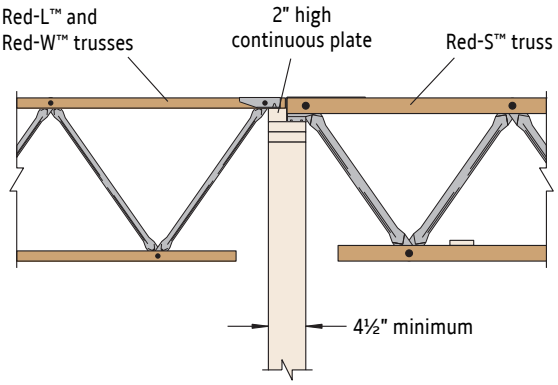

2,860 lbs reaction capacity at 100% duration of load for Red-L™ and Red-W™ trusses; higher reactions require more bearing length

14 Bottom Chord Bearing with Butting Trusses
U-Clip

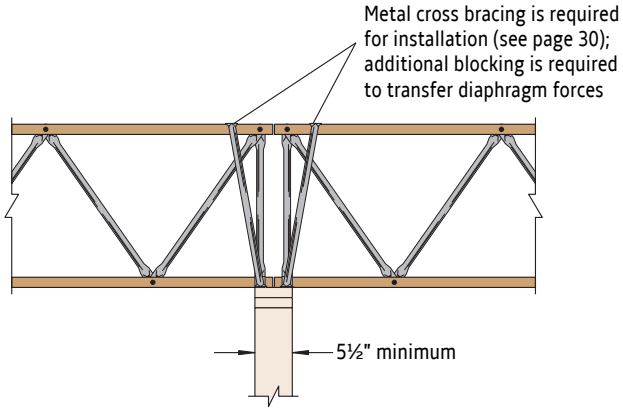

15 Bottom Chord Bearing with Cross Bracing
U-Clip

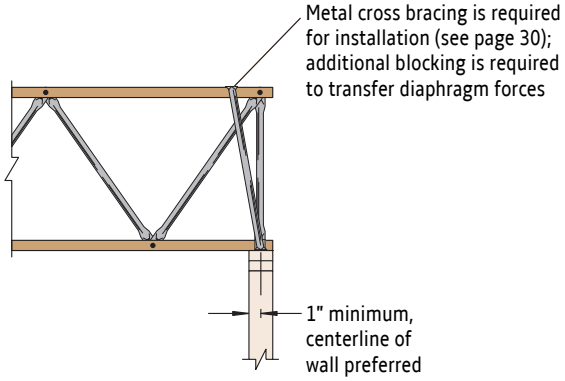

16 Top Chord Bearing at Skewed Wall
No-Notch Clip

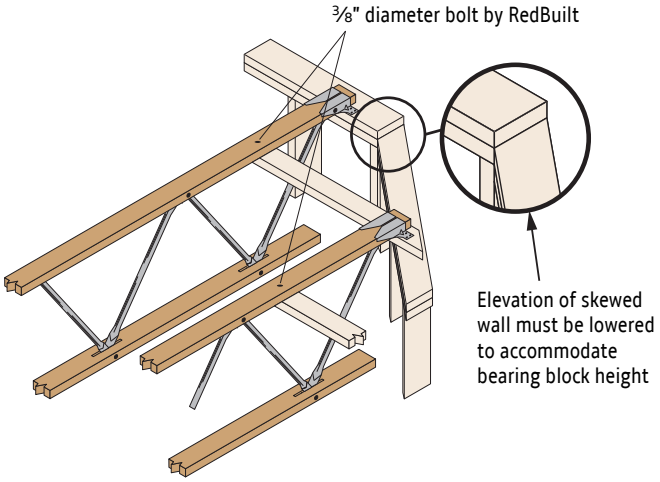

17 Top Chord Bearing Cantilever

No-Notch Clip

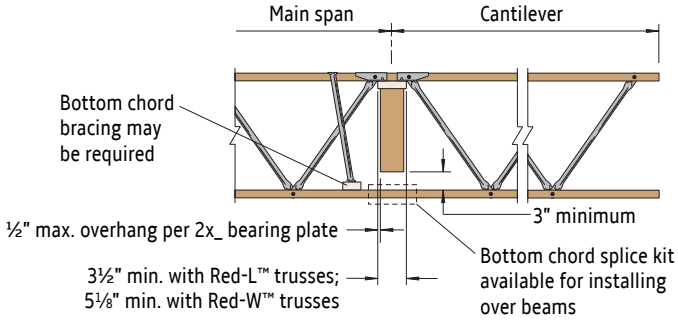

Contact your RedBuilt technical representative if cantilever exceeds ⅓ of main span

18 Bottom Chord Bearing Cantilever

U-Clip

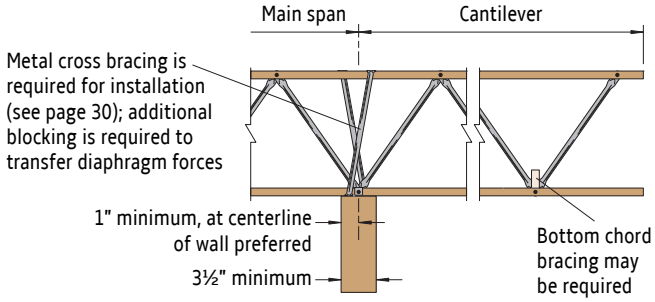

Contact your RedBuilt technical representative if cantilever exceeds ⅓ of main span

19 Top Chord Extension

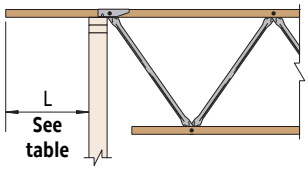

Length L	Allowable Uniform Load Capacity (plf)					
	Red-L™ Trusses			Red-W™ Trusses		
	Floor (100%)	Snow Roof (115%)	Non-Snow Roof (125%)	Floor (100%)	Snow Roof (115%)	Non-Snow Roof (125%)
10"	375	425	460	455	500	515
12"	375	425	460	455	500	515
14"				455	500	515
16"				390	465	470
18"				275	330	330

- Values are limited by the published backspan capacity (plf).
- Members evaluated for 300 lb. point load.

20 Double Top Chord Extension

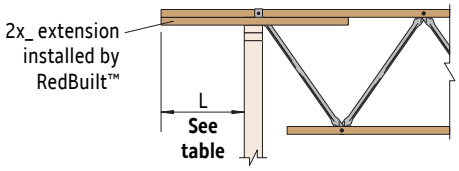

Design criteria for details 19 and 20:

F_v = 175 psi
F_b = 2,100 psi
E = 1.8 x 10^6 psi

Deflection:

- 2L/360 at LL for floors (live load = 0.80 x total load)
- 2L/240 at TL for roofs

Length L	Allowable Uniform Load Capacity (plf)					
	Red-L™ Trusses			Red-W™ Trusses		
	Floor (100%)	Snow Roof (115%)	Non-Snow Roof (125%)	Floor (100%)	Snow Roof (115%)	Non-Snow Roof (125%)
18"	375	425	460	455	500	515
20"	295	355	355	400	480	480
22"	220	265	265	300	360	360
24"	170	205	205	230	280	280
26"	135	160	160	180	220	220
28"				145	175	175
30"				120	145	145
32"				100	115	115

- Values are limited by the published backspan capacity (plf).
- Members evaluated for 300 lb. point load.

21 Double 2x_ Outrigger

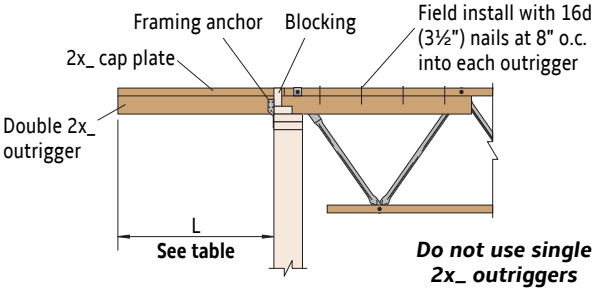

Do not use single 2x_ outriggers

The following minimum criteria were used to develop the values:

2x4 and 2x6:
F_v = 175 psi
F_b = 2,100 psi
E = 1.8 x 10^6 psi

2x8:
F_v = 175 psi
F_b = 900 psi(1)
E = 1.6 x 10^6 psi

(1) Multiply by C_F=1.2

Outrigger deflection:

- 2L/360 at LL for floors (live load = 0.80 x total load)
- 2L/240 at TL for roofs
- Outrigger deflection = $\frac{WL^4}{8EI}$

Outrigger Length L	Allowable Uniform Load Capacity (plf)								
	Double 2x4 Outrigger			Double 2x6 Outrigger			Double 2x8 Outrigger		
	Floor (100%)	Snow Roof (115%)	Non-Snow Roof (125%)	Floor (100%)	Snow Roof (115%)	Non-Snow Roof (125%)	Floor (100%)	Snow Roof (115%)	Non-Snow Roof (125%)
24"	375	425	460	375	425	460	375	425	460
30"	345	395	430	375	425	460	375	425	460
36"	240	275	300	375	425	460	375	425	460
42"	175	200	210	375	425	460	375	425	460
48"	115	140	140	330	380	415	295	340	370
54"				260	300	325	235	270	290
60"				210	245	265	190	220	235
66"				175	200	210	155	180	195
72"				135	160	160	130	150	165
78"				105	125	125	110	130	140
84"				85	100	100	95	110	120
90"				70	80	80	85	95	105
96"				55	70	70	75	85	90

- Values are limited by the published backspan capacity (plf).
- Members evaluated for 300 lb. point load.

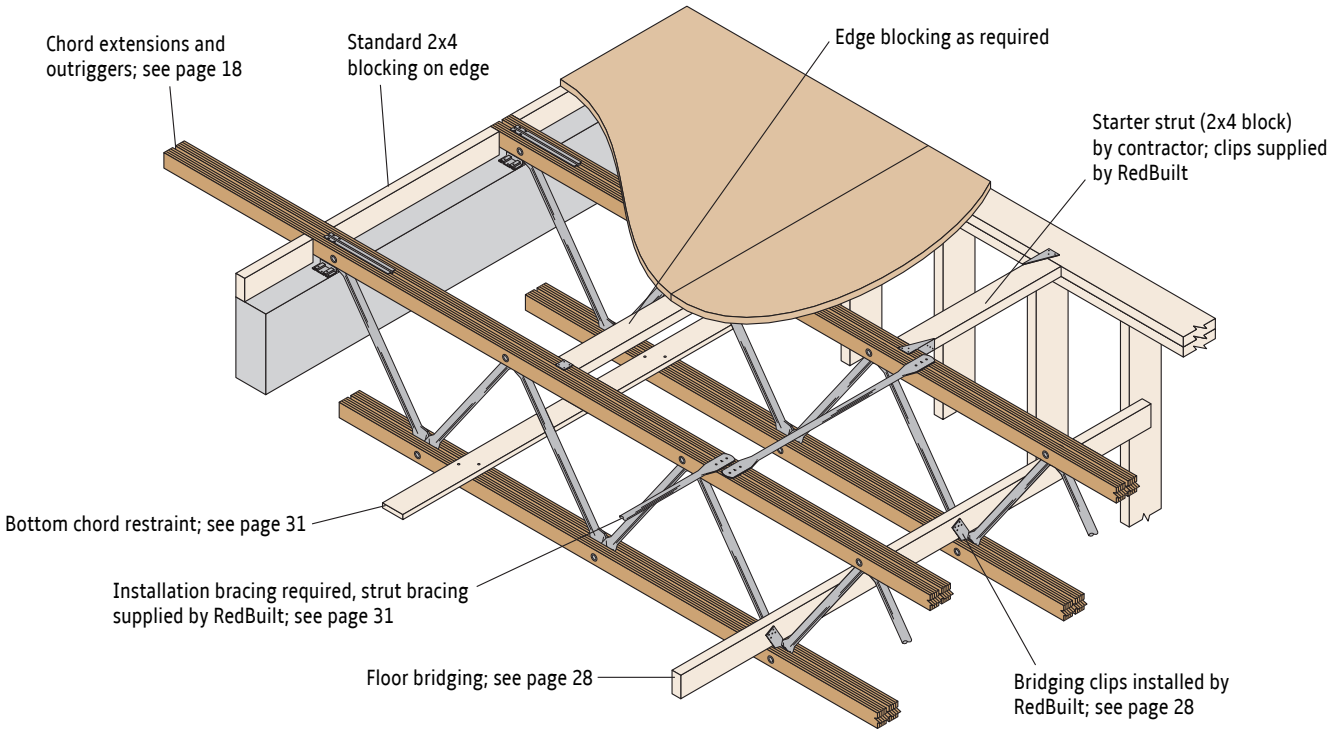

22 Top Chord Bearing
S-Clip

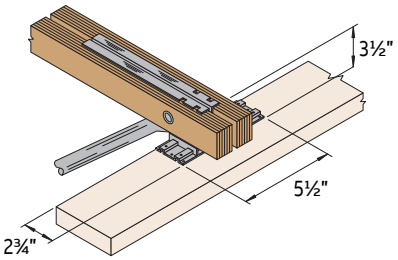

23 Bottom Chord Bearing
Angle Clip

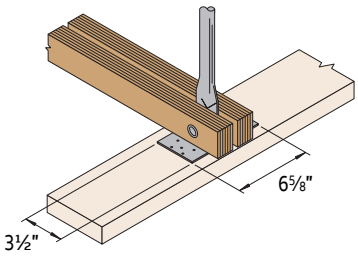

24 Top Bearing
Flush-Mount Clip (Heavy Duty)

Specify for high axial load applications

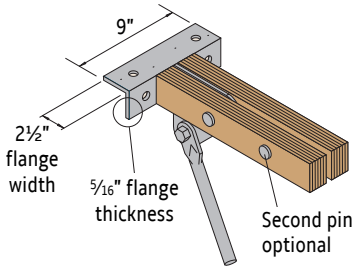

Maximum slope is ½:12. Contact your RedBuilt technical representative for truss depths less than 22". See pages 24–26 for additional information on Wind or Seismic Connections.

25 Beveled Plate Requirements—Top Chord Bearing



Beveled plate is required for all slopes when trusses are cantilevered

26 Beveled Plate Requirements—Bottom Chord Bearing

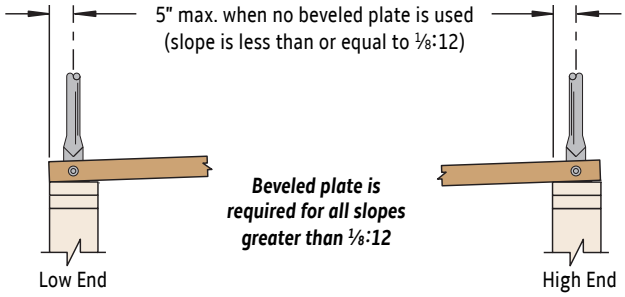

Beveled plate is required for all slopes when trusses are cantilevered

See page 22 for bearing reaction capacities

27 Top Chord Bearing on Ledger
Flush-Mount Bearing Clip

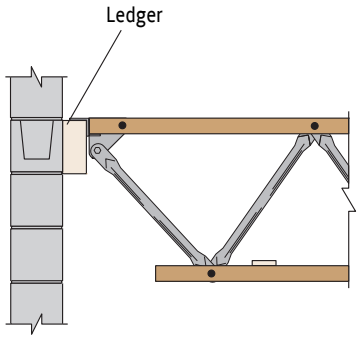

28 Red-I™ Joist Butting with Red-S™ Truss
S-Clip

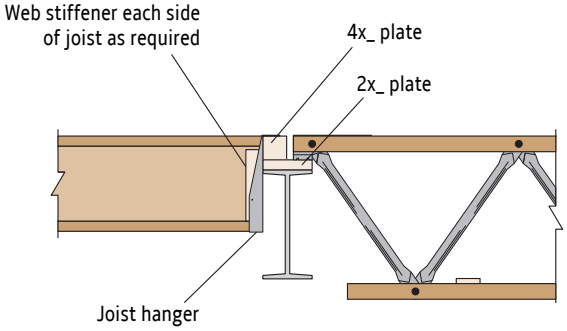

Option: Bearing clips may also be welded directly to steel beam

29 Top Chord Bearing
Flush-Mount Bearing Clip (Dropped and Non-Dropped)

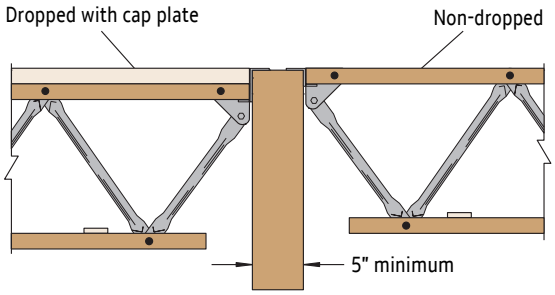

See page 25 for axial tension or compression capacity information

30 Top Chord Bearing with Butting Trusses
S-Clip

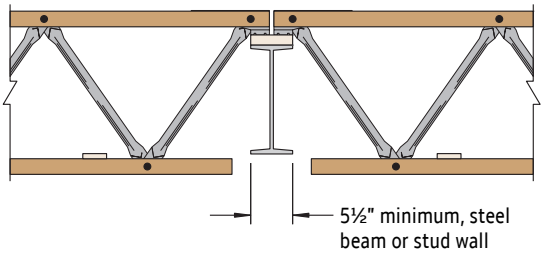

Option: Bearing clips may also be welded directly to steel beam

31 Bottom Chord Bearing with Cross Bracing
Angle Clip

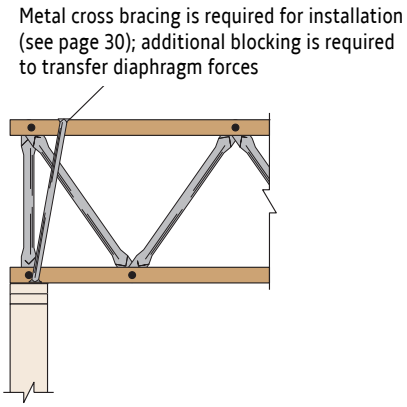

32 Top Chord Bearing on Ledger
S-Clip

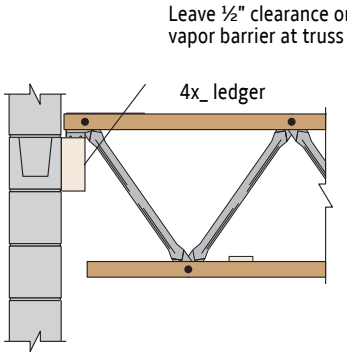

33 Top Chord Bearing Cantilever

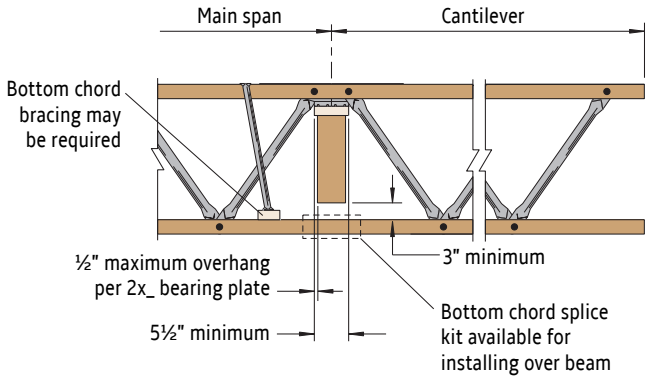

To check cantilever capacity, contact your RedBuilt technical representative

34 Bottom Chord Bearing Cantilever

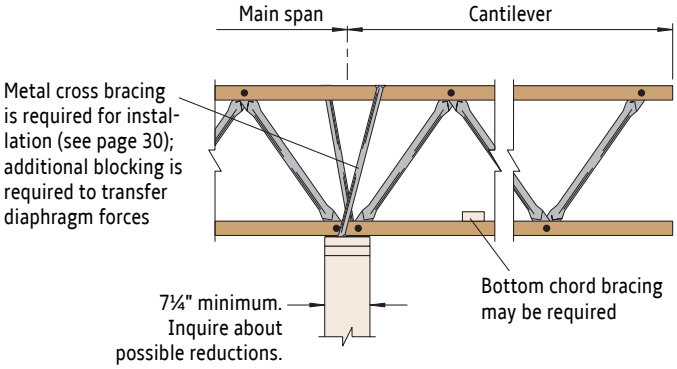

To check cantilever capacity, contact your RedBuilt technical representative

35 Top Chord Extension

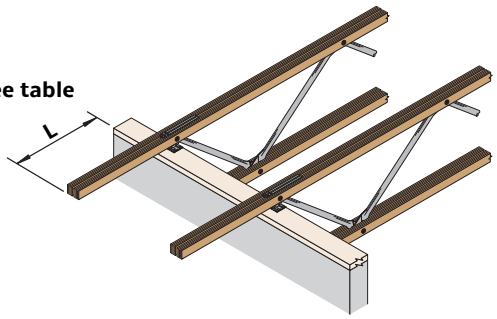

Length L	Chord Extension Capacity (plf)		
	Floor (100%)	Snow Roof (115%)	Non-Snow Roof (125%)
18"	290	330	360
20"	245	295	295
22"	195	235	235
24"	160	190	190
30"	90	110	110

- Values are limited by the published backspan capacity (plf).
- Members evaluated for 300 lb. point load.

The following criteria were used to develop the values:

F_v = 285 psi
F_b = 3,000 psi(1)
E = 2.0 x 10^6 psi

(1) Multiply by size factor = 1.18

Deflection:
- 2L/360 at LL for floors (live load = 0.80 x total load)
- 2L/240 at TL for roofs

36 Double 2x_ Outrigger

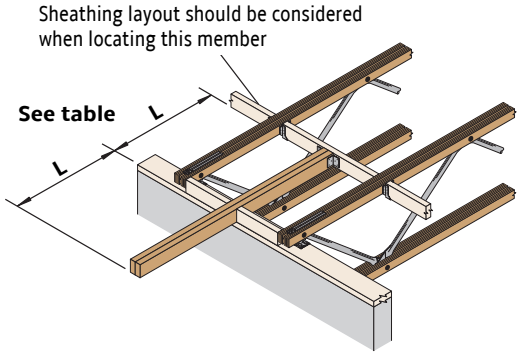

Outriggers deeper than 2x4s require that spacer blocks be placed under the truss bearings

Outrigger Length L	Allowable Uniform Load Capacity (plf)								
	Double 2x4 Outrigger			Double 2x6 Outrigger			Double 2x8 Outrigger		
	Floor (100%)	Snow Roof (115%)	Non-Snow Roof (125%)	Floor (100%)	Snow Roof (115%)	Non-Snow Roof (125%)	Floor (100%)	Snow Roof (115%)	Non-Snow Roof (125%)
24"	255	305	305	490	545	570	490	545	570
30"	160	190	190	490	545	570	490	545	570
36"	100	120	120	390	470	470	455	520	555
42"	65	80	80	260	315	315	385	445	475
48"	45	55	55	180	215	215	295	340	370
54"				130	155	155	235	270	290
60"				95	115	115	190	220	235
66"				70	85	85	145	175	175
72"				55	65	65	115	135	135
78"				45	55	55	90	110	110
84"				35	45	45	75	85	85
90"				30	35	35	60	70	70
96"					30	30		60	60

- Values are limited by the published backspan capacity (plf).
- All calculations assume a single 2x_ header of equal depth to the outriggers, with the trusses at 48" on-center.
- For single 2x_ outriggers, use half of allowable load shown for double outriggers.
- Members evaluated for 300 lb. point load.

The following criteria were used to develop the values:

2x4 and 2x6:
F_v = 175 psi
F_b = 2,100 psi
E = 1.8 x 10^6 psi

2x8:
F_v = 175 psi
F_b = 900 psi(1)
E = 1.6 x 10^6 psi

(1) Multiply by C_F=1.2

Outrigger deflection:
- 2L/360 at LL for floors (live load = 0.80 x total load)
- 2L/240 at TL for roofs
- Outrigger deflection = $\frac{7WL^4}{24EI} + \frac{48^2WL}{EI}$

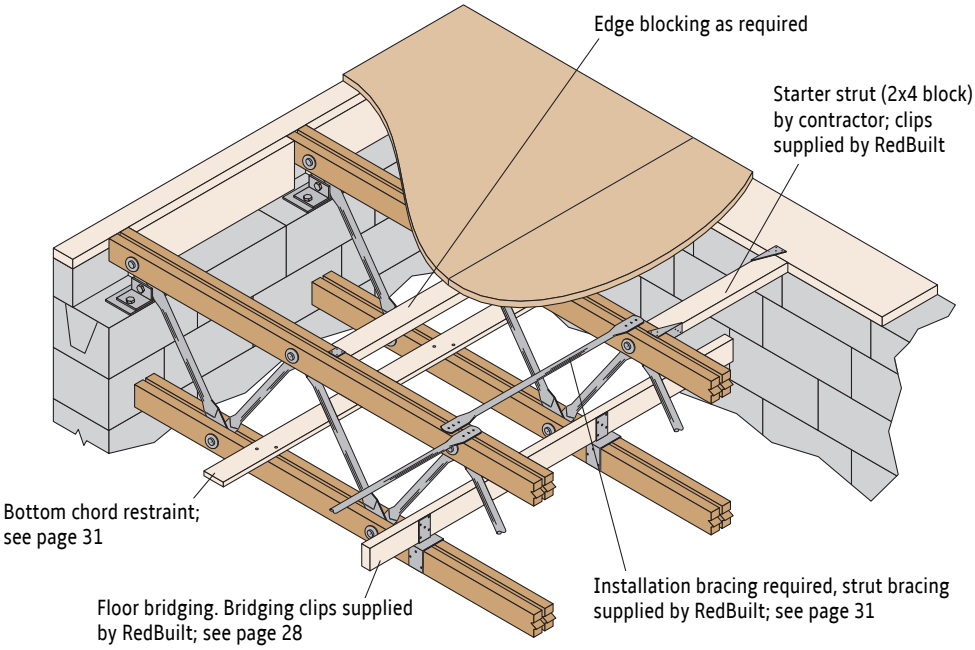

37 Red-M™ Truss Top Chord Bearing
S-Clip

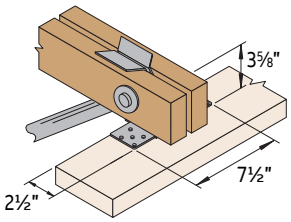

38 Red-M™ Truss Bottom Chord Bearing
Angle Clip

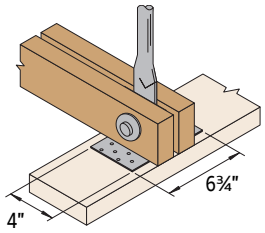

39 Top Chord Bearing
Z-Clip

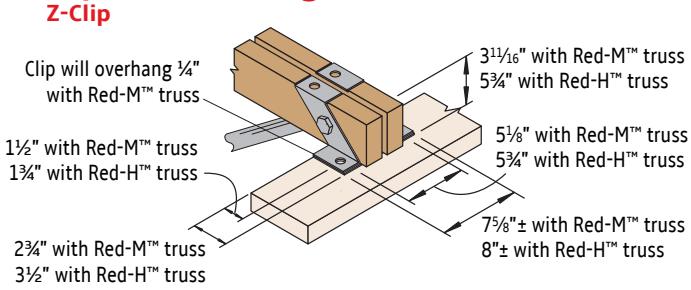

40 Top Chord Bearing
P-Clip

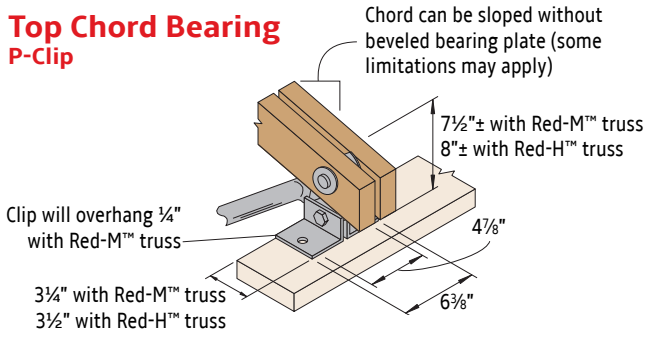

41 Bottom Chord Bearing
T-Clip

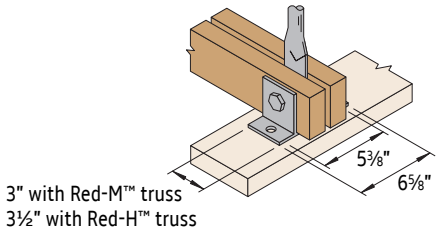

42 Top Bearing
Flush-Mount Clip (Heavy Duty)

Specify for high axial load applications

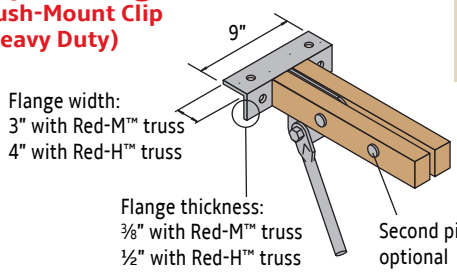

Maximum slope is ½:12. Contact your RedBuilt technical representative for truss depths less than 31". See pages 24–26 for additional information on Wind or Seismic Connections.

See page 22 for bearing reaction capacities

43 Beveled Plate Requirements

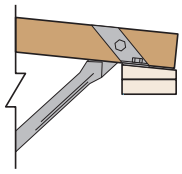

Beveled plates serve two functions:
1. Provide proper bearing for bearing clips.
2. Avoid interference between top chords and bearing plate.

Slopes Requiring a Beveled Plate

Bearing Condition		S-Clip Z-Clip	Angle Clip T-Clip	P-Clip	Flush Mount
Low End	2x8	>1/8:12	>¼:12	N.A.	See detail 42
	2x6	>3/16:12	>¼:12	N.A.	
	2x4	>¼:12	>¼:12	N.A.	
High End		>¼:12	>¼:12	N.A.	
Cantilevers		All slopes			N.A.

44 Typical Top Chord Extension

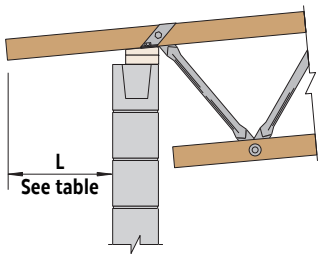

The following criteria were used to develop the values:

F_v = 175 psi
F_b = 2,100 psi
E = 1.8 x 10^6 psi

Deflection:
2L/360 at LL for floors (live load = 0.80 x total load)
2L/240 at TL for roofs

Allowable Uniform Load Capacity (plf)

Length	Red-M™			Red-H™		
	Floor (100%)	Snow Roof (115%)	Non-Snow Roof (125%)	Floor (100%)	Snow Roof (115%)	Non-Snow Roof (125%)
24"	290	330	360	375	430	465
30"	235	270	295	305	350	380
36"	200	230	250	255	295	320
42"	140	170	170	220	255	275
48"	95	115	115	195	225	245
54"				175	200	215
60"				155	180	195
66"				145	165	180
72"				125	150	150

- Values are limited by the published backspan capacity (plf).
- Members evaluated for 300 lb. point load.

45 Top Chord Bearing with Butting Trusses
Z-Clip

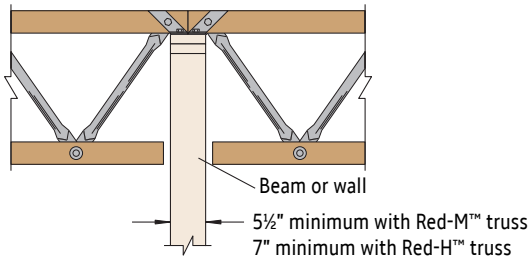

46 Top Chord Bearing
Flush-Mount Bearing Clip (Dropped and Non-Dropped)

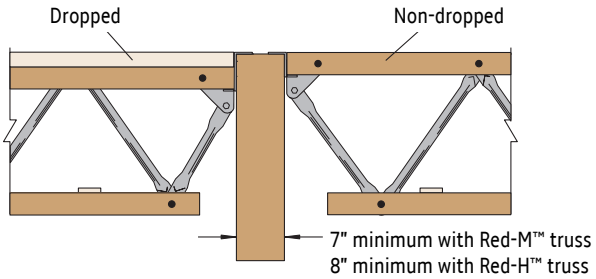

See page 25 for axial tension or compression capacity information

47 Top Chord Bearing Cantilever
Z-Clip

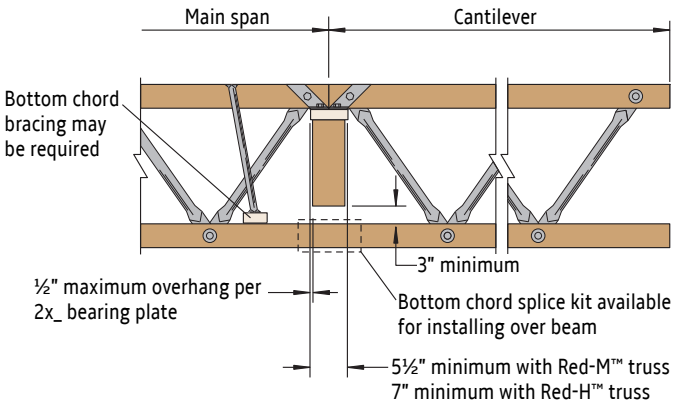

Contact your RedBuilt technical representative if cantilever exceeds ⅓ of the truss span

48 Bottom Chord Bearing Cantilever
T-Clip

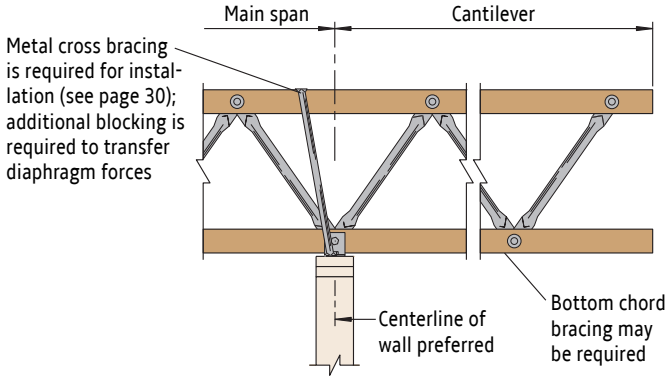

Contact your RedBuilt technical representative if cantilever exceeds ⅓ of the truss span

49 Concentrated Loads

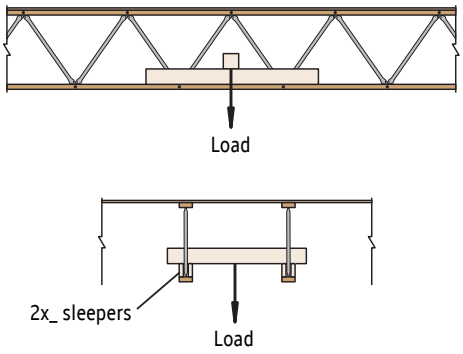

Concentrated and Non-Uniform Loads

For the most efficient use of RedBuilt™ products carrying concentrated loads or non-uniform loads, and/or used in conditions other than simple spans, consult your RedBuilt technical representative for precise sizing. As a general rule, extra members should be added to the system to carry concentrated loads such as bearing partitions, air-conditioners, and other mechanical equipment. Handling concentrated loads in this manner usually provides the most economical system and also helps ensure more uniform deflection.

50 Side-Loaded Double Truss Assembly

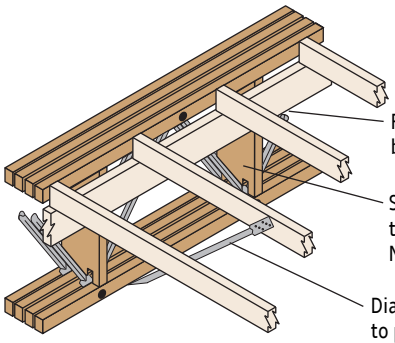

Load transfer blocks are required only when the load is imposed from the side

Truss Series	Maximum Load Per Transfer Block
Red-L™, Red-W™	700 lbs
Red-S™, Red-M™	1,200 lbs
Red-H™	1,300 lbs

51 Header Detail

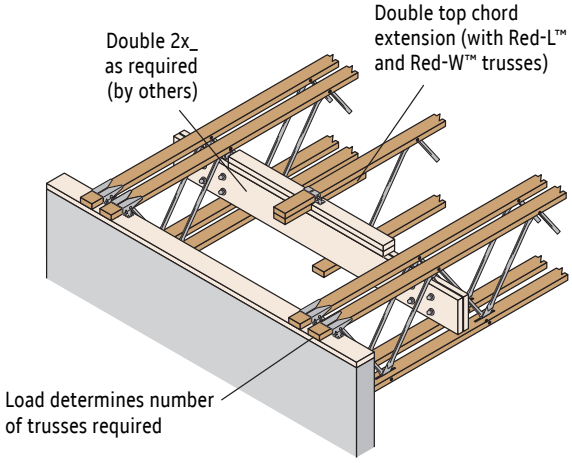

Truss depth, design load, and web angle may limit header size. Check feasibility with your local RedBuilt technical representative.

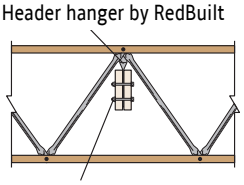

Truss Series	Maximum Allowable Header Clip Load Per Truss			
	Single Truss		Double Truss	
	Reaction	Header Bolts Required	Reaction	Header Bolts Required
Red-L™ and Red-W™	2,190 lbs	2	2,740 lbs	4
Red-S™	4,170 lbs	4		
Red-M™	3,540 lbs	4		
Red-H™	9,640 lbs	4		

- Table values do not consider header or header connection designs.
- Table values are based on large truss pins. Contact your local RedBuilt technical representative to ensure that the truss application works with the corresponding header reaction.

52 Loads on Cantilever

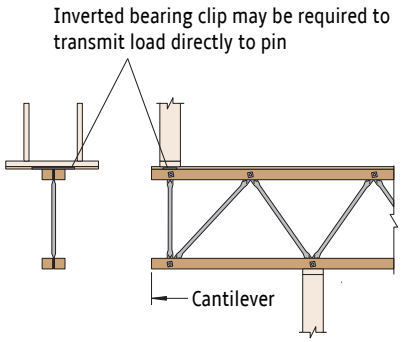

53 Non-Bearing Partitions

Perpendicular to Truss

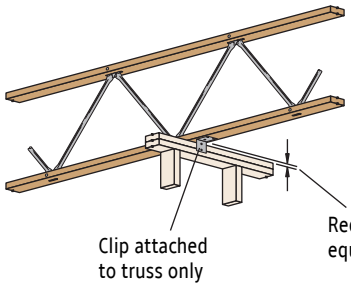

Parallel to Truss

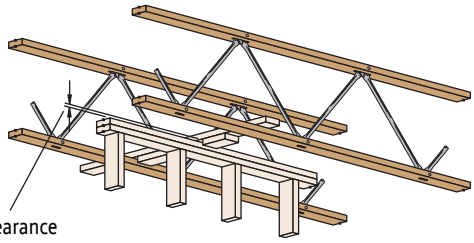

OPEN-WEB TRUSS BEARING CLIP CAPACITIES

Single- and Double-Chord Bearing Clip Capacities

Truss Series	Clip Type	Detail Number	Bearing (Top or Bottom)	Bearing[2] Length (min.)	Reaction Capacity (lbs) Duration of Load 100%	115%	125%
Red-L™	6" No-Notch	2	T	1¾"	2,860	3,290	3,290
	6" No-Notch	2	T	2½"	3,025	3,480	3,780
	6" No-Notch	2	T	3½"	3,150	3,620	3,925
	U-Clip	3	B	2¾"	4,400[3]	4,845[3]	4,845[3]
Red-W™	6" No-Notch	2	T	1¾"	2,860	3,290	3,290
	6" No-Notch	2	T	2⅝"	3,500	4,025	4,300
	U-Clip	3	B	2¾"	4,850	5,580	5,880
Red-S™	S-Clip	22	T	2¾"	5,390	5,390	5,390
	Angle Clip	23	B	3½"	5,325	6,125	6,655
Red-M™	S-Clip	37	T	2½"	3,990[3]	4,330[3]	4,330[3]
	Z-Clip[1]	39	T	2¾"	7,390	7,390	7,390
	P-Clip	40	T	3¼"	8,310	8,310	8,310
	Angle Clip	38	B	4"	6,085	7,000[3]	7,610[3]
	T-Clip	41	B	3"	6,500	6,500	6,500
Red-H™	Z-Clip[1]	39	T	3½"	9,200	9,200	9,200
	P-Clip	40	T	3½"	9,100	9,200	9,200
	T-Clip	41	B	3½"	9,260[3]	10,650[3]	11,575[3]

(1) Increased bearing length is required when truss slope meets or exceeds ¼:12.

(2) Sloped applications may require longer bearing lengths.

(3) Use a Douglas fir bearing plate (or equivalent).

- Values are based on bearing plate material (with $F_{c\perp}$ = 405 psi, SG = 0.42) unless noted with (3).

Single- and Double-Chord Flush-Mount Bearing Clip Capacities

Truss Series	Detail Number	Bearing (Top or Bottom)	Bearing Length (min.)	Reaction Capacity (lbs) Allowable Bearing Plate Stress 405 psi	555 psi	600 psi	Steel (max.)	45° Skew (max.)
Red-L™ and Red-W™	4	T	1¾"	3,125	3,745	4,015	5,210	3,125
Red-S™	24	T	2 3/16"	3,995	4,835	5,220	7,310	3,995
Red-M™	42	T	2⅝"	5,240	6,230	6,415	11,505	4,870
Red-H™	42	T	3½"	6,620	8,115	8,775	12,055	6,620

- A maximum overhang of ¼" is allowed for all flush-mount bearing clips for published design loads.

Single- and Double-Chord Bearing Clip—Wind Uplift Capacities

Truss Series	Clip Type	Detail Number	Bearing Location	Bearing Length[2] (min.)	Fastener Quantity	Capacities (lbs) at 160% 10d x 1½" (Common)	10d x 3" (Common)	16d x 2½" (Common)	16d x 3½" (Common)	SD9 x 1½"[3]	⅝" x 2" Lag	⅝" x 4" Lag
Red-L™	No-Notch[1]	2	Top	1¾"	6	315	655	595	835	1,120		
	Flush-Mount	4	Top	1¾"	2						1,570	3,000
	U-Clip	3	Bottom	2¾"	6	315	655	595	835	1,170		
Red-W™	No-Notch[1]	2	Top	1¾"	6	310	650	585	835	1,020		
	Flush-Mount	4	Top	1¾"	2						1,570	3,000
	U-Clip	3	Bottom	2¾"	6	310	650	585	835	1,170		
Red-S™	S-Clip[1]	22	Top	2¾"	10	480	610	610	610	610		
	Flush-Mount	24	Top	2 3/16"	2						1,570	3,000
	Angle Clip	23	Bottom	3½"	10	515	990	975	990	990		
Red-M™	S-Clip	37	Top	2½"	10	430	430	430	430	430		
	Z-Clip	39	Top	2¾"	2						1,200	2,090
	P-Clip	40	Top	4½"	2						1,200	2,310
	Flush-Mount	42	Top	2⅝"	2						1,570	3,000
	Angle Clip	38	Bottom	4" Overhang 5¼" End	12	625	1,090	1,090	1,090	1,090		
	T-Clip	41	Bottom	3" Overhang 4¾" End	2						1,200	2,310
Red-H™	Z-Clip	39	Top	3½"	2						1,200	2,310
	P-Clip	40	Top	4¾"	2						1,200	2,310
	Flush-Mount	42	Top	3½"	2						1,570	3,000
	T-Clip	41	Bottom	3½" Overhang 5½" End	2						1,200	2,310

(1) Increased uplift capacities are available with clip modifications. Please contact your RedBuilt™ representative.

(2) Sloped applications may require longer bearing lengths.

(3) SD9112 Strong-Drive® wood screw by Simpson Strong-Tie.

- Capacity is based on load duration factor = 160%.
- Capacity is based on spruce-pine-fir bearing plate material (SG = 0.42).
- Please contact your RedBuilt representative for other bearing plate material or for capacity at other load durations.

54 Top Chord Bearing

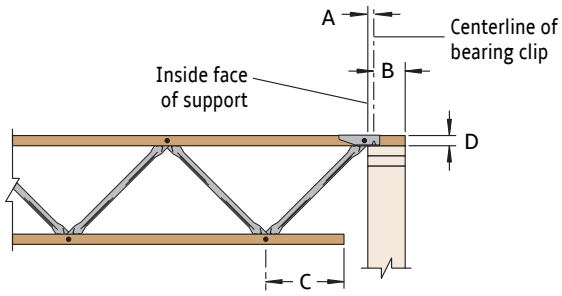

55 Bottom Chord Bearing

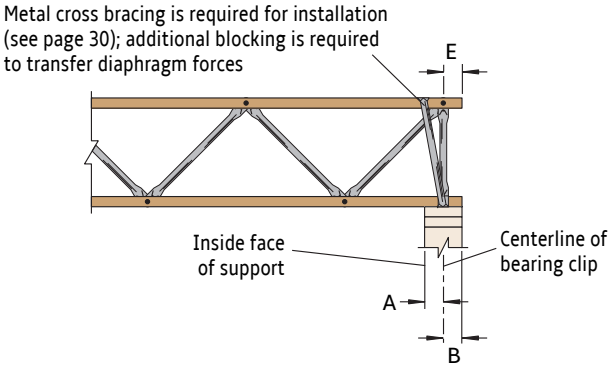

56 Bottom Chord Bearing without Vertical Web

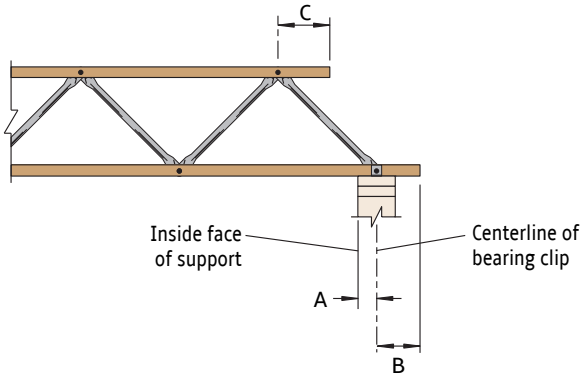

57 Bottom Chord Cantilever

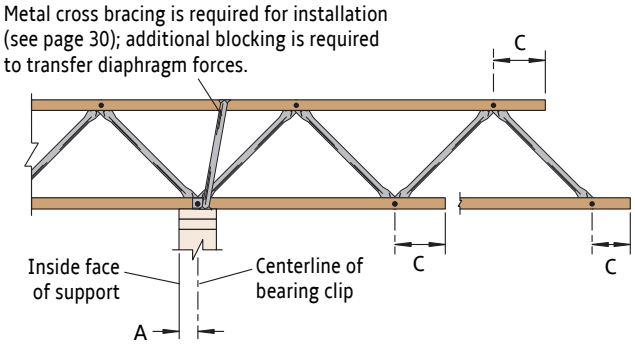

When possible, locate bottom chord bearing clip at centerline of support

Dimensions for Detailing

Truss Series	Bearing Clip	Top Chord Bearing[1]					Bottom Chord Bearing[1]				
		A	B	C		D	A	B	C		E
				Minimum[2][3]	Minimum Required at Maximum Load				Minimum[2][3]	Minimum Required at Maximum Load	
Red-L™ and Red-W™	No-Notch Clip	7/8"	7/8"	2 3/16"	9"	1 1/2"	7/8"	7/8"	2 3/16"	9"	2 1/4"
	U-Clip	1"	1 3/4"	2 3/16"	9"	1 1/2"	1"	1 3/4"	2 3/16"	9"	1 1/4"
Red-S™	S-Clip	1 3/8"	1 3/8"	2 5/8"	9"	3 1/2"	–	–	–	–	–
	Angle Clip	–	–	–	–	–	1 3/4"	1 3/4"	2 5/8"	9"	1 3/4"
Red-M™	S-Clip	1 3/16"	1 15/16"	3 1/2"	12"	3 5/8"	1 3/16"	1 15/16"	3 1/2"	12"	3 1/2"
	Angle Clip	–	–	–	–	–	2"	3 1/4"	3 1/2"	12"	2"
	P-Clip	1 3/4"	Varies[4]	3 1/2"	12"	Varies[4]	–	–	–	–	–
	Z-Clip	1 3/8"	1 5/8"	3 1/2"	12"	3 11/16"	1 3/8"	1 5/8"	3 1/2"	12"	3 1/2"
	T-Clip	–	–	–	–	–	1 1/2"	3"	3 1/2"	12"	2"
Red-H™	P-Clip	1 3/4"	Varies[4]	4 3/8"	15"	Varies[4]	–	–	–	–	–
	Z-Clip	1 3/4"	2 7/16"	4 3/8"	15"	5 3/4"	1 3/4"	2 7/16"	4 3/8"	15"	4 3/8"
	T-Clip	–	–	–	–	–	1 3/4"	3 3/4"	4 3/8"	15"	2 5/8"

(1) Minimum support width equals A + B (2 x A at bottom chord cantilever).
(2) Actual pin to end distance is based on forces in truss chord. Minimum cut-off may not be acceptable.
(3) Based on 2012 NDS® minimum end distance of 3.5D.
(4) P-Clip geometry is dependent on the starter web angle and top chord slope.

Legend
A = Face of support to centerline of bearing clip
B = Centerline of bearing clip to end of chord
C = Pin to end of chord
D = Bearing clip height
E = Pin to end of chord with vertical web

Wall and Strap Ties for Open-Web Trusses

Listed below is a small sample of the various nail-based straps and ties offered by Simpson Strong-Tie® Company Inc. Please consult their catalog or the USP Structural Connectors® catalog for additional options.

Strap Tension Tie Nailing and Allowable Tension Loads

Design Category	Maximum Ledger Size	Model No.	Non-Cracked Concrete			Cracked Concrete			CMU Wall		
			Nail Qty.	Nail Size	Tension (lbs)	Nail Qty.	Nail Size	Tension (lbs)	Nail Qty.	Nail Size	Tension (lbs)
Wind and SDC A–B	4x	PAI18(1)	9	10d x 1½"	1,820	9	10d x 1½"	1,820	9	10d x 1½"	1,055
		PAI23(1)	14	10d x 1½"	2,835	14	10d x 1½"	2,360	14	10d x 1½"	1,805
		PAI28(1)	16	10d x 1½"	3,370	16	10d x 1½"	2,360	16	10d x 1½"	2,705
		PAI35(1)	18	10d x 1½"	3,370	18	10d x 1½"	2,360	18	10d x 1½"	2,815
		MPAI32	16	10d x 1½"	2,335	–	–	–	16	10d x 1½"	2,355
		MPAI44	24	10d x 1½"	2,865	–	–	–	24	10d x 1½"	2,865
SDC C–F	4x	PAI18(1)	9	10d x 1½"	1,820	9	10d x 1½"	1,820	9	10d x 1½"	1,055
		PAI23(1)	14	10d x 1½"	2,830	14	10d x 1½"	1,980	14	10d x 1½"	1,805
		PAI28(1)	20	10d x 1½"	2,830	16	10d x 1½"	1,980	16	10d x 1½"	2,705
		PAI35(1)	20	10d x 1½"	2,830	18	10d x 1½"	1,980	18	10d x 1½"	2,815
		MPAI32	–	–	–	–	–	–	16	10d x 1½"	2,355
		MPAI44	–	–	–	–	–	–	24	10d x 1½"	2,865

(1) LSL cap plate required for strap nailing.

- Table information adapted from Simpson Strong-Tie® catalog *Wood Construction Connectors* 2017–2018, page 89.
- For applicable notes and additional information, see the Simpson Strong-Tie catalog.

Strap Ties

Simpson Tie	Required Nails	Nail Size	Allowable Load (lbs) at 160%
MST37(1)(2)	42	16d x 2½"	5,080
MST48(1)(2)	50	16d x 2½"	5,310
MSTI48(1)	48	10d x 1½"	5,065
MSTI60(1)	60	10d x 1½"	5,080
MSTI72(1)	72	10d x 1½"	5,080
LSTI49	32	10d x 1½"	2,975
LSTI73	48	10d x 1½"	4,205
LSTA36(1)	24	10d x 3"	1,640
MSTA36(1)	26	10d x 3"	2,050

(1) LSL cap plate required for strap nailing.

(2) Not suitable for Red-S™ trusses.

- Values consider full strap nailing.
- Table information adapted from Simpson Strong-Tie® catalog *Wood Construction Connectors* 2017–2018, pages 301–304.

Bolted Wall Ties

Simpson Tie	Required Fasteners	Allowable Tension Load (lbs) at 160%		
		10d x 1½" Nails	16d x 2½" Nails	SD #10 x 1½" Screws
LTT19	8	1,310		
LTT20B(1)	10	1,355		
LTTI31	18	1,350		
HTT4(1)	18	3,610	4,235	4,455
HTT5(1)	26	4,350	5,090	4,555
HTT5KT(1)	26			5,445
HTT5-¾(1)	26	4,065	5,090	4,830

(1) LSL cap plate required for strap nailing.

- Information adapted from Simpson Strong-Tie® catalog *Wood Construction Connectors* 2017–2018, pages 80–81.
- For applicable notes and additional information, see the Simpson Strong-Tie catalog.

58 Wall and Strap Ties for Red-L,™ Red-W,™ Red-S,™ Red-M,™ and Red-H™ Trusses

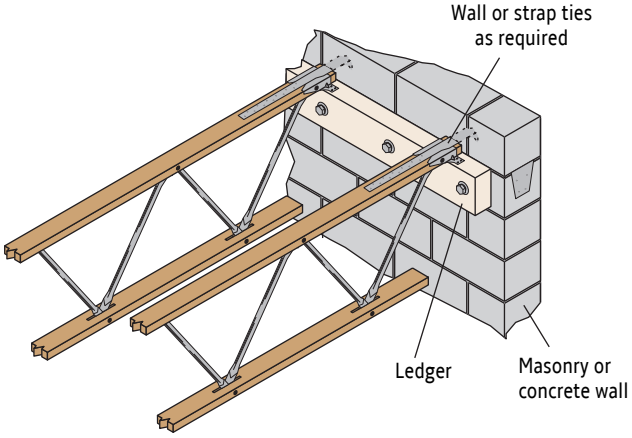

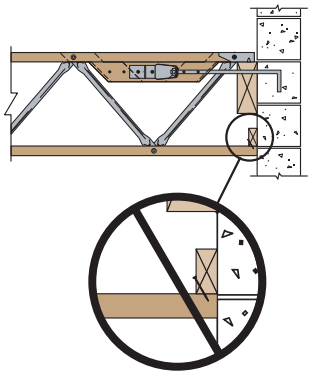

DO NOT attach bottom chord to wall when using any top chord bearing truss

Also see detail 6 on page 13 for more information.

62 Single Chord Flush-Mount Bearing Clip

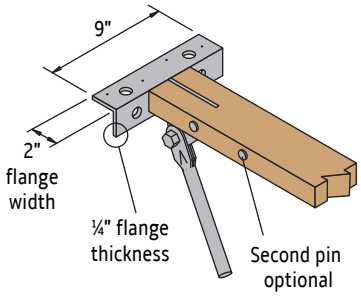

63 Double Chord Flush-Mount Bearing Clip

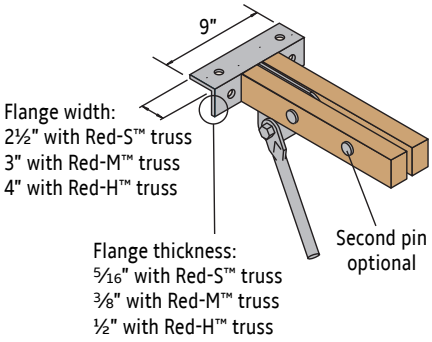

64 Double Chord Flush-Mount Bearing Clip with Nailer

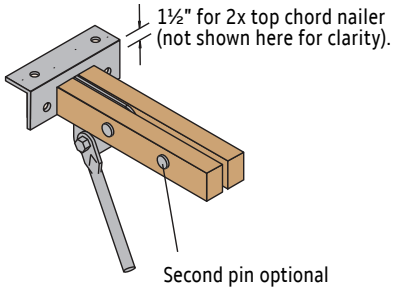

Axial Tension or Compression Capacity

Truss Series	Capacity at 133% or 160% (lbs)	
	1 Pin	2 Pin
Red-L™	2,705	4,450
Red-W™	3,700	6,115
Red-S™(1)	4,320	8,125
Red-M™(1)	5,115	10,235
Red-H™(1)	6,325	12,220

(1) With or without top chord nailer.

- Design professional of record shall provide attachment for clip to bearing.

WIND BRACING

Truss bottom chord bracing may be required by building code provisions for wind uplift design when roof trusses do not have directly applied ceilings. Project engineer shall specify wind load; contact your RedBuilt representative for specific wind bracing stability requirements.

60 Cross Bracing with 2x4 Nailer

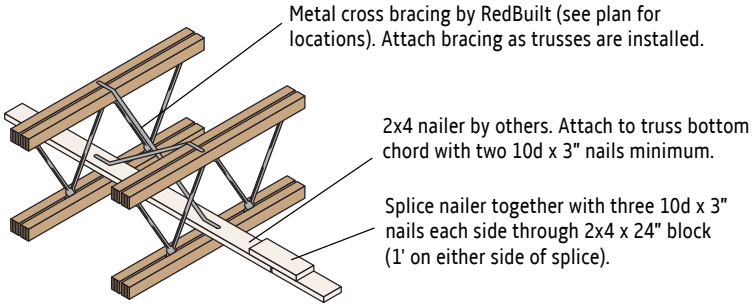

For wind bracing on Red-S™, Red-M™ and Red-H™ trusses. Cross bracing may not actually cross.

61 Cross Bracing with Bridging Row

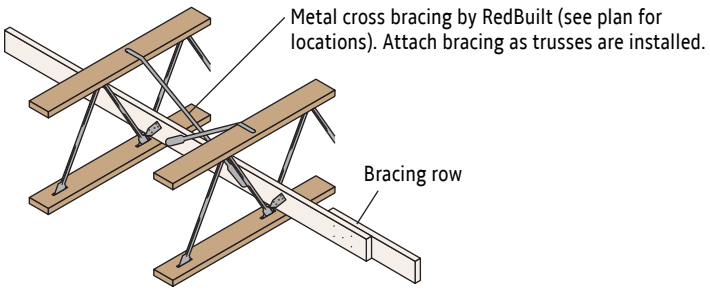

For wind bracing on Red-L™ and Red-W™ trusses. Cross bracing may not actually cross.

65 Red-L™ and Red-W™ Trusses with Shear Block

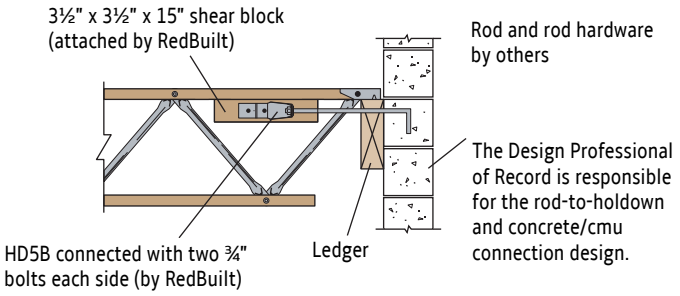

Maximum truss assembly tension capacity is 3,500 lbs at 160%. Truss geometry, especially at shallow depths, may limit capacity. Contact your RedBuilt technical representative for more information.

66 Red-L™, Red-W™, and Red-S™ Trusses with Steel Connector

Red-S™ shown, others similar. 16" min. truss depth required.

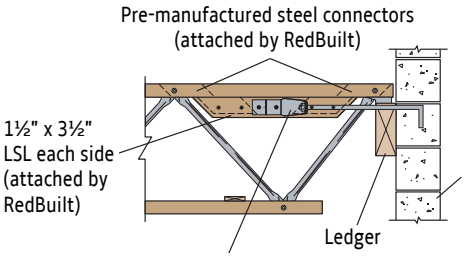

- **Red-S™:** HD5B connected with two ¾" bolts each side (by RedBuilt).
- **Red-L™ or Red-W™:** HD3B connected with two ⅝" bolts each side (by RedBuilt)

Maximum truss assembly tension capacity is 4,770 lbs for Red-L™ and Red-W™ trusses; and 7,120 lbs for Red-S™ trusses at 160%. Truss geometry may limit capacity. Contact your RedBuilt technical representative for more information.

67 Red-M™ Truss with Wall Tie

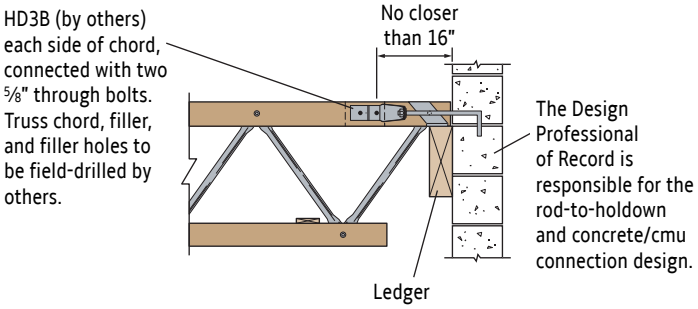

Maximum truss assembly tension capacity is 4,320 lbs with MSR chords and 4,770 lbs with RedLam™ LVL chords at 160%. Truss geometry may limit capacity. Contact your RedBuilt technical representative for more information.

68 Red-H™ Truss with Wall Tie

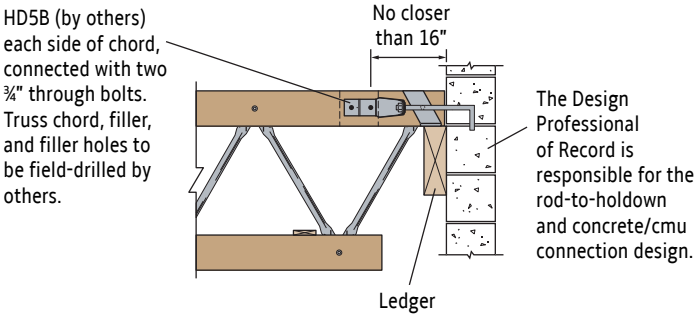

Maximum truss assembly tension capacity is 5,180 lbs with MSR chords and 7,120 lbs with RedLam™ LVL chords at 160%. Truss geometry may limit capacity. Contact your RedBuilt technical representative for more information.

69 Red-W™ Truss Top Chord Bearing
Lateral No-Notch Clip

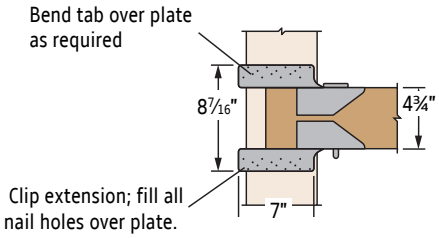

Lateral No-Notch Clip Allowable Loads (lbs)

Bearing Plate	Thickness (min.)	Nail Size (min.)	Red-W™ Trusses		
			Lateral Load (160%)		
			Seismic Load	Wind Load	
				Net Uplift = 0 PSF	Net Uplift = 5 PSF
3½"	1½"	0.148" x 1½"	1,970	1,970	1,410
3½"	2½"	0.162" x 2½"	2,320	2,320	1,410
5½"	1½"	0.148" x 1½"	2,905	2,905	2,090
5½"	2½"	0.162" x 2½"	2,905	2,905	2,090
7¼"	1½"	0.148" x 1½"	2,905	2,905	2,625
7¼"	2½"	0.162" x 2½"	2,905	2,905	2,625

- Values are based on bearing plate width SG = 0.50. For SG = 0.42, multiply table values by 0.86.
- For other uplift loads, interpolation is permitted.

69A Red-L™ and Red-W™ Truss
Standard No-Notch Clip *(Alternate)*

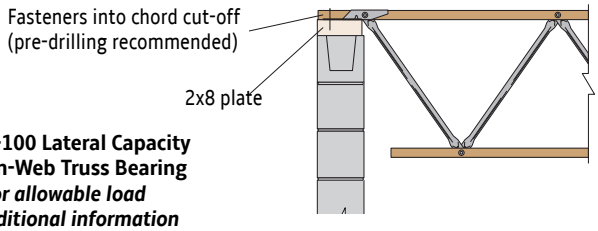

See* TB-100 Lateral Capacity of Open-Web Truss Bearing Clips *for allowable load and additional information

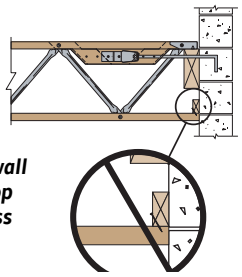

DO NOT attach bottom chord to wall when using any top chord bearing truss

70 RedBuilt™ Open-Web Truss with Cap Plate

Cap plates provide the following functions:

- Transfer seismic/wind strap loads (LSL cap plate only).
- Enhance diaphragm nailing capabilities.
- Provide diaphragm shear transfer at continuous panel joints (required at all high shear diaphragms).
- Eliminate interference between subpurlins and truss pins in panelized roof systems.
- Required to provide adequate attachment base for structural insulated panels (SIPs) or Tectum deck applications.

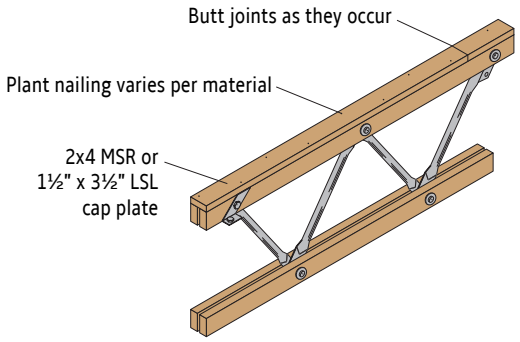

When uplift on cap plate-to-truss connection exceeds 104 plf, contact your RedBuilt representative

Sawn Lumber Cap Plate

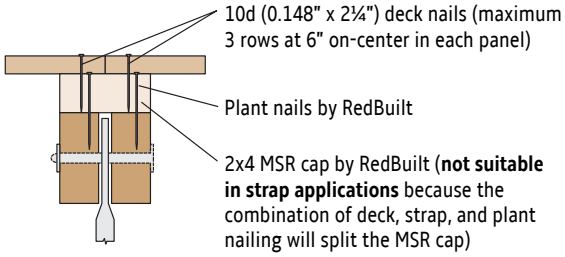

For diaphragm nails, use 2¼" maximum length deck nails to eliminate nail-spacing limitations with truss chords

LSL Cap Plate (suitable for straps; see page 24)

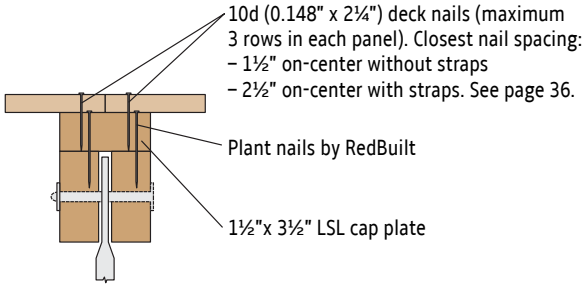

71 Double Chord Open-Web Truss with SIP or Tectum Panels

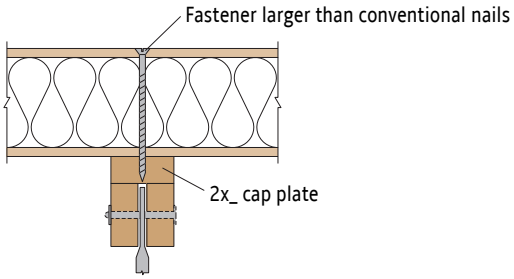

72 Typical Double Chord Open-Web Truss with 2x_ Subpurlin

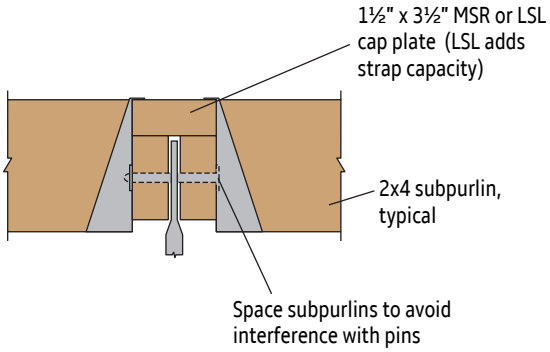

73 Double Chord Open-Web Truss with Continuous Panel Joint

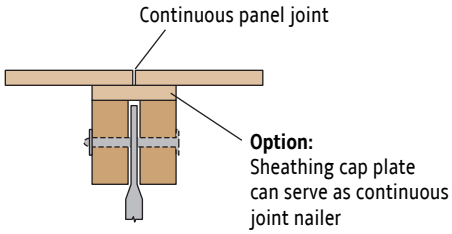

Nail spacing is limited by truss chords. See page 36.

BRIDGING

Bridging is used to make each truss act with those next to it (load sharing) and minimize or equalize deflections from non-uniform loads. Bridging should not be confused with bracing, which has a different purpose.

Roof Systems usually do not require bridging because differential deflections, vibrations, etc. are typically not a problem with roof systems. However, **bridging is required for load sharing with Red-L™ and Red-W™ trusses** because they have single-member chords and are commonly used in relatively long spans with wide on-center spacing.

Floor Systems perform better under typical loads—particularly with regard to deflection and vibration—if they have an effective bridging system.

Red-L™ and Red-W™ Trusses

Bridging is required for all floor and roof applications.

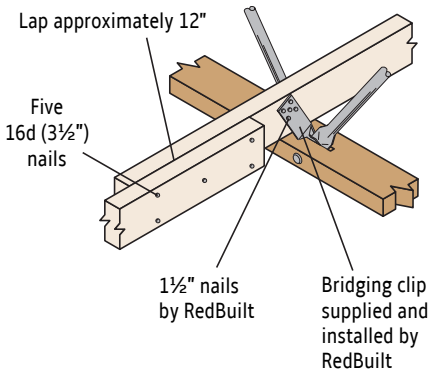

2x_ bridging is designed to transfer a 500 lb load. Field bend bridging clip approximately 30 degrees before nailing to bridging row.

Bridging must be attached to a minimum of three trusses

Bridging Rows

Truss Bridging	Span	No. of Rows
Roof Truss Bridging(1)(2)	≤ 16'	1
	> 16' to 35'	2
	> 35' to 55'	3
	> 55'	4
Floor Truss Bridging(2) Without a Directly Applied Ceiling	≤ 10'	1
	> 10' to 24'	2
	> 24' to 32'	3
	> 32'	4
Floor Truss Bridging(2) With a Directly Applied Ceiling	≤ 22'	1
	> 22' to 32'	2
	> 32' to 42'	3
	> 42'	4

(1) Additional bracing may be required when trusses are to be installed out of plumb greater than ¼:12. Contact your RedBuilt representative.

(2) Bridging is required in cantilevers when the length of cantilever exceeds three times the truss depth.

Sawn Lumber Bridging

Floor or Roof

Maximum On-Center Truss Spacing	Minimum Size of Continuous Bridging Member		
	Doug Fir #2	MSR 1650f–1.3E	MSR 2100f–1.8E
16"	2x4	2x4	2x4
19.2"	2x6	2x4	2x4
24"	2x6	2x6	2x4
32"	2x6	2x6	2x6
48" (Floor / Roof)	2x8 / 2x8	NA / 2x6	2x8 / 2x6

Red-S™, Red-M™ and Red-H™ Trusses

Roof: Bridging not required, except for long-span modular-installation applications. See page 32.
Floor: Bridging required at 12' on-center maximum. See **Sawn Lumber Bridging** table above for bridging sizes.

74 Red-S™ Trusses

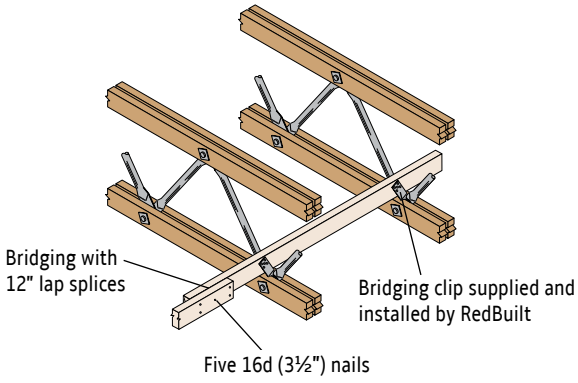

Field bend the bridging clip approximately 30 degrees before nailing to the bridging row

75 Red-M™ and Red-H™ Trusses

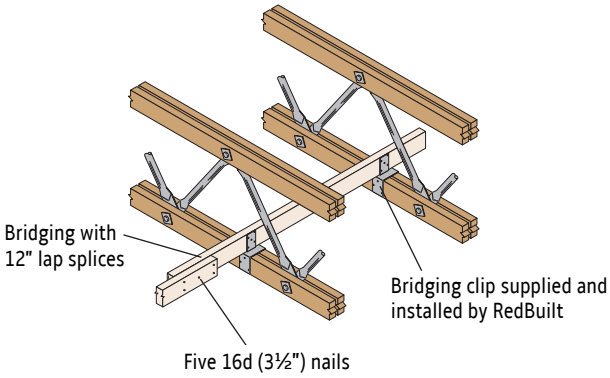

77 Round Ducts

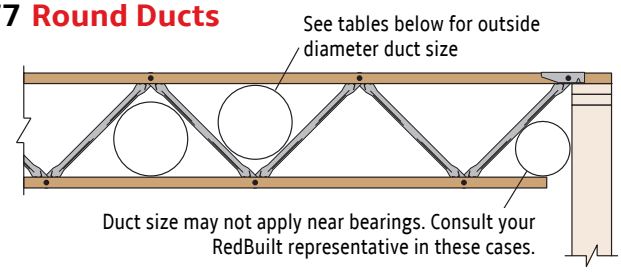

78 Rectangular Ducts

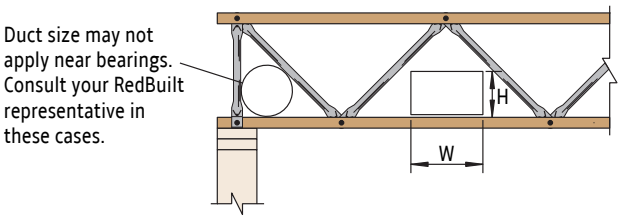

Red-L™ and Red-W™ Trusses

Truss Depth	Round Duct Size	Rectangular Duct Height			
		4"	6"	8"	10"
		Rectangular Width			
14"	8"	9"	7"	4"	–
16"	8"	10"	8"	5"	3"
18"	9"	11"	9"	7"	5"
20"	10"	12"	10"	8"	6"
22"	10"	12"	10"	9"	7"
24"	10"	12"	11"	9"	8"
26"	11"	13"	11"	10"	8"
28"	12"	14"	12"	11"	9"
30"	13"	15"	14"	12"	11"
32"	14"	17"	15"	14"	12"
34"	15"	18"	17"	15"	14"
36"	16"	19"	18"	17"	15"
38"	17"	21"	19"	18"	17"
40"	18"	22"	21"	19"	18"

Red-S™ Trusses

Truss Depth	Round Duct Size	Rectangular Duct Height			
		4"	6"	8"	10"
		Rectangular Width			
16"	7"	7"	5"	3"	2"
18"	7"	8"	6"	4"	3"
20"	8"	8"	7"	5"	4"
22"	8"	9"	7"	6"	5"
24"	9"	10"	9"	7"	6"
26"	10"	12"	10"	9"	7"
28"	11"	13"	12"	10"	9"
30"	12"	14"	13"	12"	10"
32"	13"	16"	14"	13"	12"
34"	14"	17"	16"	14"	13"
36"	15"	18"	17"	16"	14"
38"	16"	20"	18"	17"	16"
40"	17"	21"	20"	18"	17"
42"	18"	23"	21"	20"	18"
44"	19"	24"	23"	21"	20"
46"	20"	25"	24"	23"	21"
48"	21"	27"	25"	24"	23"

Red-M™ Trusses

Truss Depth	Round Duct Size	Rectangular Duct Height			
		4"	6"	8"	10"
		Rectangular Width			
20"	7"	8"	6"	5"	3"
22"	8"	8"	7"	5"	4"
24"	8"	8"	7"	6"	5"
26"	8"	9"	8"	6"	5"
28"	9"	9"	8"	7"	6"
30"	9"	10"	9"	8"	7"
32"	10"	11"	10"	9"	8"
34"	11"	12"	11"	10"	9"
36"	12"	13"	12"	11"	10"
38"	13"	14"	13"	12"	11"
40"	13"	16"	14"	13"	12"
42"	14"	17"	16"	14"	13"
44"	15"	18"	17"	16"	14"
46"	16"	19"	18"	17"	16"
48"	17"	20"	19"	18"	17"
50"	18"	21"	20"	19"	18"
52"	18"	22"	21"	20"	19"

Red-H™ Trusses

Truss Depth	Round Duct Size	Rectangular Duct Height			
		4"	6"	8"	10"
		Rectangular Width			
24"	7"	7"	6"	5"	4"
26"	7"	8"	7"	5"	4"
28"	8"	8"	7"	6"	5"
30"	9"	9"	8"	7"	6"
32"	9"	10"	9"	8"	7"
34"	10"	11"	10"	9"	8"
36"	11"	12"	11"	10"	9"
38"	12"	14"	12"	11"	10"
40"	13"	15"	14"	12"	11"
42"	14"	16"	15"	14"	12"
44"	14"	17"	16"	15"	14"
46"	15"	18"	17"	16"	15"
48"	16"	19"	18"	17"	16"
50"	17"	20"	19"	18"	17"
52"	18"	21"	20"	19"	18"
54"	18"	22"	21"	20"	19"
56"	19"	23"	22"	21"	20"
58"	20"	24"	23"	22"	21"
60"	21"	25"	24"	23"	22"
62"	22"	26"	25"	24"	23"
64"	23"	27"	26"	25"	24"
66"	23"	29"	27"	26"	25"
68"	24"	30"	29"	27"	26"
70"	25"	31"	30"	29"	27"
72"	26"	32"	31"	30"	29"

General Notes

- Widths shown are the **minimum allowable openings based on heaviest loads (shortest panels).** Check with your RedBuilt representative for more precise sizing, including larger openings.
- Tables are applicable **only for uniform loads.**

For trusses designed for office floor conditions requiring concentrated loads, or for any other non-uniform loads, contact your RedBuilt representative.

INSTALLATION BRACING

Open-web trusses require installation bracing to prevent lateral buckling of the chord members until they are stabilized by connection to the sheathing and by permanent bracing of the completed structure (as designed). Installation bracing includes strut bracing rows, cross bracing at bottom chord bearing conditions, bottom chord restraint, and braced end wall or diaphragm restraint adequate to support the strut bracing rows. The criteria used for this installation bracing assume **either** of the following conditions:

- The truss carries its own weight plus the weight of applied sheathing and two 250-pound workers concentrated at ⅓ points of the span;

  OR

- An unloaded truss with a 30 mph wind

Bracing for construction loads equivalent to or beyond these loads is the responsibility of the installer. **Bracing must be installed as each truss is put in position.**

All trusses are laterally unstable until properly braced. The longer the span, the more care is required. Adequate restraint is necessary at all stages of construction.

Complete stability is not achieved until all bracing and decking is completely installed and properly fastened.

Installation bracing and procedures, as well as the safety of the workers, are the responsibility of the installer.

For more information, see RedBuilt's *Open-Web Truss Installation Guide* (available online at redbuilt.com).

Typical Application

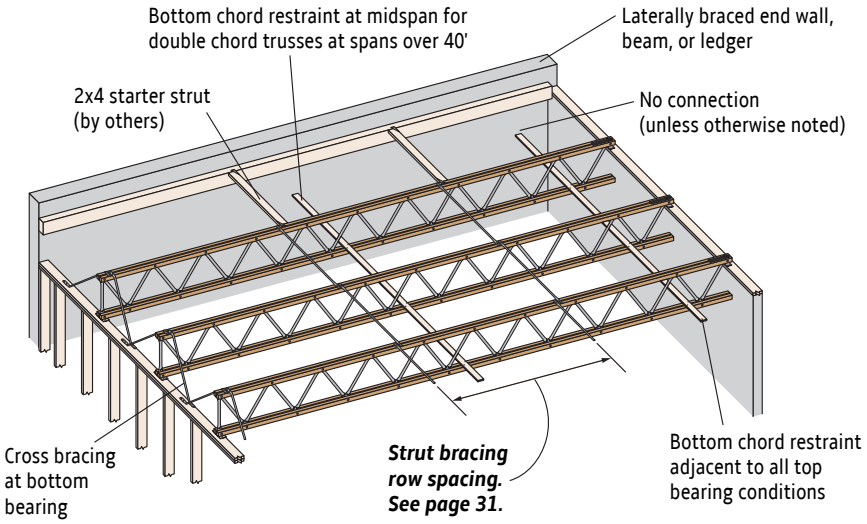

General Notes

- Bottom chord restraints are 1x4 (minimum) nailers and are attached to the top of the bottom chord with two 8d (2½") nails for double chord trusses only. Materials are to be provided by the installer.
- Bridging, when specified, may be used instead of bottom chord restraint.

Permitted Installation Tolerances

Truss Chord Alignment Tolerance

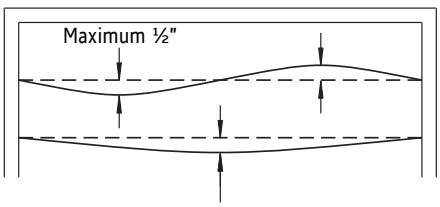

To provide proper performance, trusses should not vary more than ½" from a straight line

Vertical Alignment Tolerance

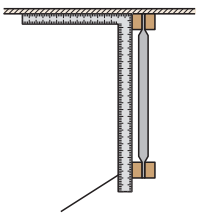

Bottom chord of truss should not be out of square with deck by more than ¼:12 of truss depth. Example: ½" for a 24" depth truss.

Overhang Tolerance at Bearing

(Red-S™ bearing shown)

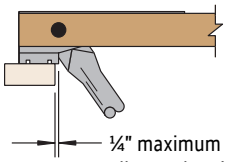

(1) ½" maximum overhang for Red-M™ series trusses with Z-Clip or P-Clip bearing hardware

Cross Bracing

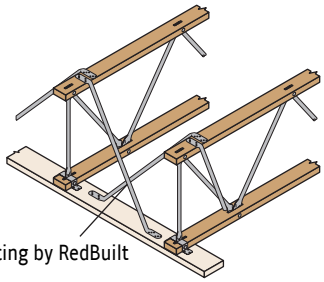

Cross bracing by RedBuilt

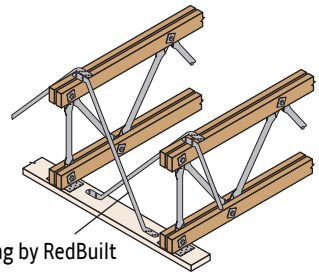

Cross bracing by RedBuilt

Cross bracing is provided for all open-web trusses at bottom chord bearing conditions. Install cross bracing as each truss is set. Maximum lateral load is 500 lbs per truss.

Strut Bracing

Installation bracing is required for all open-web truss applications. RedBuilt's recommended method for bracing is to use the strut bracing supplied by RedBuilt. Strut bracing rows should be spaced equally, per the on-center spacing noted in the **Required Spacing** table below. On roof systems, strut bracing is attached to the top of upper chord members. On floor systems it is attached to the bottom of the upper chord members to avoid interference with the direct attachment of sheathing. See detail below.

Roof Application



Floor Application

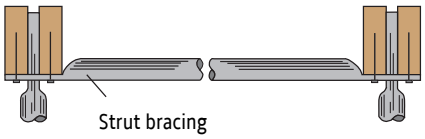

Maximum Number of Erected Trusses Before Sheathing is Required

Truss Series	Span				
	< 30'	< 40'	< 50'	< 60'	< 70'
Red-L™	40	27	21	17	14
Red-W™	40	27	21	17	14
Red-S™	29	20	15	12	10
Red-M™	20	14	11	8	7
Red-H™	14	9	7	6	5

- Per bay of trusses.

Required Spacing

Truss Series	Strut Bracing Row Spacing
Red-S™	10' o.c.
Red-L™, Red-M™, and Red-H™	12' o.c.
Red-W™	14' o.c.

Starting Bracing—No Laterally Braced End Wall or Beam

Middle of Bay

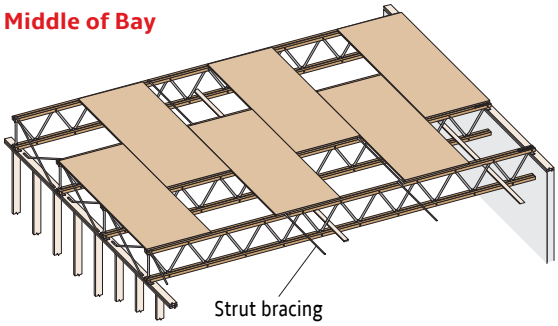

End of Bay

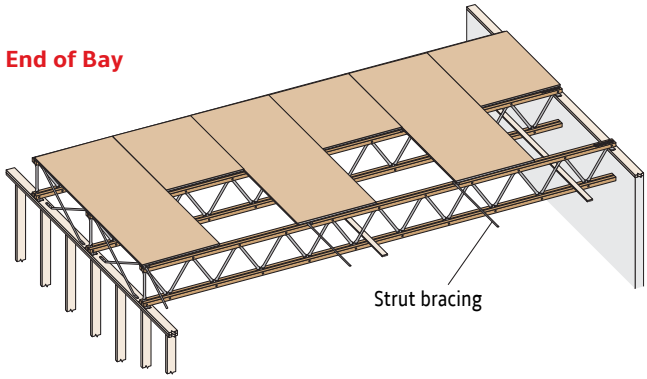

General Notes

- Installation bracing is required, strut bracing is supplied by RedBuilt. See spacing and sheathing requirements above.
- Sheath and nail per project architect, engineer, or local building code. See page 36 for allowable nailing into truss chords.

Bottom Chord Restraint for Red-S,™ Red-M,™ and Red-H™ Trusses

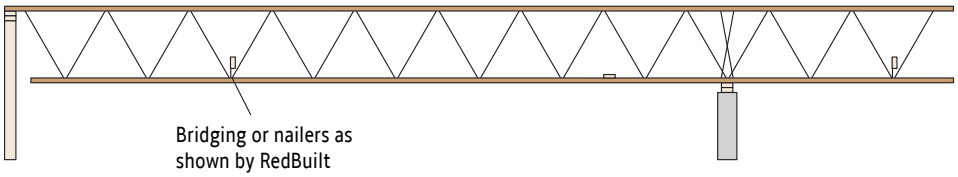

Attach 1x4 minimum nailer to top of bottom chord with two 8d (2½") nails in each chord member

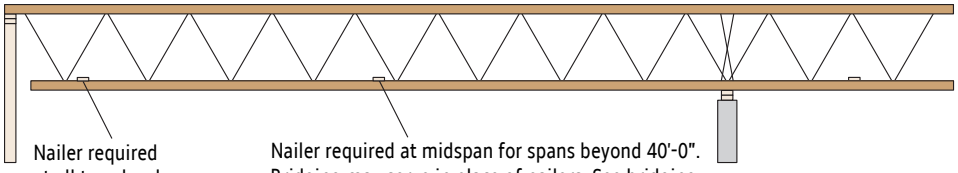

General Notes

- Bottom chord restraint is required to stabilize the bottom chord and is typically provided by the installer.
- **Bracing may be required at cantilevers as determined by RedBuilt.**

Long Spans (Over 70 Feet)

RedBuilt™ open-web trusses with spans over 70 feet are available only if all of the following additional requirements are satisfied. Review each of these requirements with your RedBuilt representative prior to sizing and detailing our products in any application involving spans beyond 70 feet.

1. There must be a responsible architect and/or engineer of record throughout the design and construction period of the project.
2. The responsible architect or engineer must include the following statement in the job specifications: ***"The trusses shall be installed in rigid modules at least 8 feet in width, accurately assembled in a jig with final sheathing permanently and totally attached while on the ground. Specified bridging shall be installed in each module as detailed."***
3. Only structural panel sheathing will be permitted.
4. The purchaser-contractor must sign an addendum to our standard purchase agreement that contains the above requirements.
5. Prior to execution of the purchase agreement, the specifications and details of the job must be submitted to and reviewed by RedBuilt engineering along with a description of the installation procedures proposed to be used. Review will be solely with respect to the above requirements.

The sketches shown at right show possible rigid modules that would satisfy the condition specified in requirement 2 above.



Modules with Sheathing Overhang

Trusses at 32" On-center

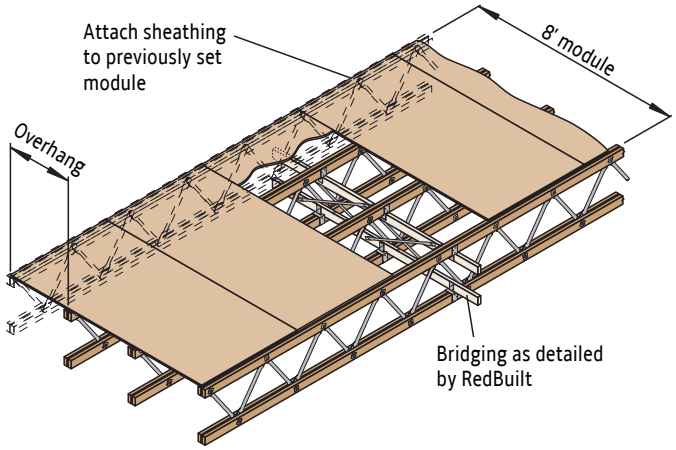

Trusses at 48" On-center

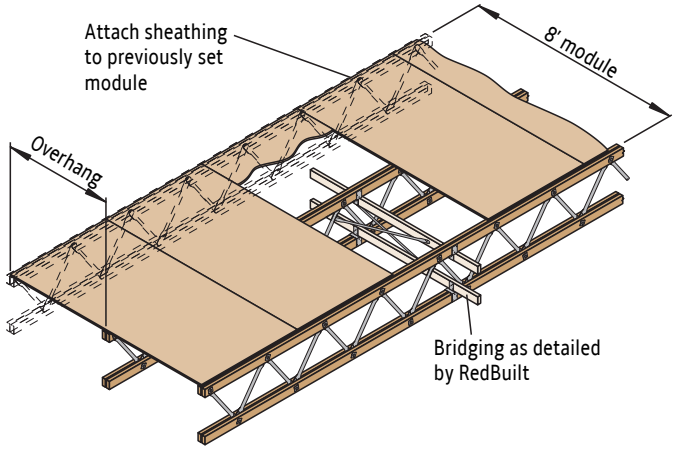

Module with Sheathing Filler Panel

Trusses at 48" On-center

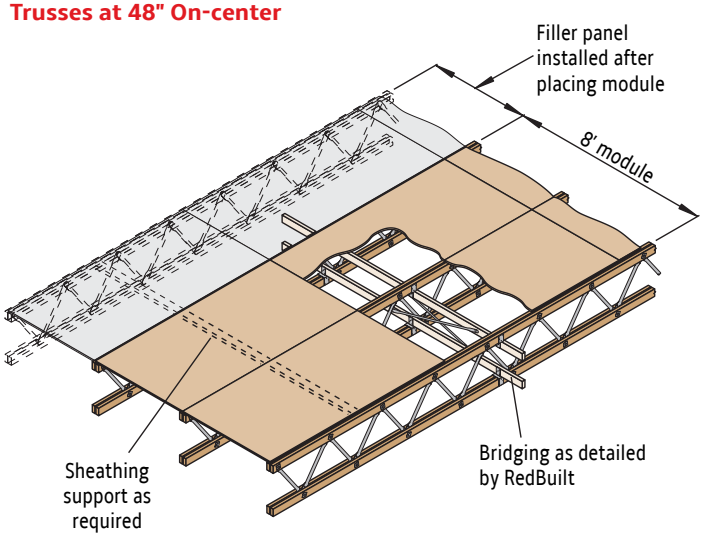

A cap may be required over double chord open-web trusses where high shear loads are encountered

Refer to local building codes for live load design requirements.

Composition Roofing

2–15 and 1–90 lb . . . . . 1.7 psf
3–15 and 1–90 lb . . . . . 2.2 psf
3-ply and gravel . . . . . 5.6 psf
4-ply and gravel . . . . . 6.0 psf
5-ply and gravel . . . . . 6.5 psf
Insulated Roof Membrane Assembly (IRMA)
  2" thick. . . . . 13.0 psf
Single-ply roofs (insulation not included)
  Ballasted system . . . . . 13.0 psf
  Mechanically fastened . . . . . 2.0 psf
  Fully adhered . . . . . 2.0 psf

Douglas Fir Sheathing*

(Based on 36 pcf for plywood, 40 pcf for OSB)

½" plywood . . . . . 1.5 psf
⅝" plywood . . . . . 1.8 psf
¾" plywood . . . . . 2.3 psf
1⅛" plywood . . . . . 3.4 psf
½" OSB . . . . . 1.7 psf
⅝" OSB . . . . . 2.0 psf
¾" OSB . . . . . 2.5 psf
⅞" OSB . . . . . 2.9 psf
1⅛" OSB . . . . . 3.7 psf

* For southern pine weights, increase Douglas fir weights by 10%.

Miscellaneous Roofing Materials

Corrugated galvanized steel
  16 ga. . . . . 2.9 psf
  20 ga. . . . . 1.8 psf
  22 ga. . . . . 1.5 psf
  24 ga. . . . . 1.3 psf
Asphalt shingles . . . . . 2.5 psf
Wood shingles . . . . . 3.0 psf
Clay tile . . . . . 9.0 to 14.0 psf
Slate (⅜" thick) . . . . . 15.0 psf

Rigid Insulation (1" thick)

Hemlock. . . . . 1.2 psf
Cork . . . . . 0.7 psf
Gold bond . . . . . 1.5 psf
Polystyrene foam . . . . . 0.2 psf
Foamglass . . . . . 0.8 psf
Rigid fiberglass . . . . . 1.5 psf

Roll or Batt Insulation (1" thick)

Rock wool . . . . . 0.2 psf
Glass wool . . . . . 0.1 psf

Floors

Hardwood (nominal 1") . . . . . 4.0 psf
Concrete (1" thick)
  Regular . . . . . 12.0 psf
  Lightweight . . . . . 8.0 to 10.0 psf
Gypsum concrete (¾" thick) . . . . . 6.5 psf
Sheet vinyl. . . . . 0.5 psf
Carpet and pad . . . . . 1.0 psf
¾" ceramic or quarry tile . . . . . 10.0 psf

Ceilings

Acoustical fiber tile . . . . . 1.0 psf
½" gypsum board. . . . . 2.2 psf
⅝" gypsum board . . . . . 2.8 psf
Plaster (1" thick) . . . . . 8.0 psf
Metal suspension system (including tile). . . . . 1.8 psf

To calculate total dead load, use a minimum of 1.5 psf for "miscellaneous" with all dead loads

Weights of Douglas Fir Framing Members

Nominal Size (in.)	Joist Spacing		
	12"	16"	24"
2x4	1.4 psf	1.1 psf	0.7 psf
2x6	2.2 psf	1.7 psf	1.1 psf
2x8	2.9 psf	2.2 psf	1.5 psf
2x10	3.7 psf	2.8 psf	1.9 psf
2x12	4.4 psf	3.3 psf	2.2 psf
3x6	3.6 plf		
4x6	5.0 plf		
4x8	6.8 plf		
4x10	8.6 plf		
4x12	10.4 plf		

- For southern pine weights, increase Douglas fir weights by 10%

Weights of Sprinkler Lines

Size of Pipe	Schedule 40, Standard Pipe		Schedule 10, Thin Wall Pipe	
	Dry (plf)	Wet (plf)	Dry (plf)	Wet (plf)
1"	1.7	2.1	1.4	1.8
1¼"	2.3	3.0	1.8	2.5
1½"	2.7	3.6	2.1	3.1
2"	3.7	5.2	2.7	4.2
2½"	5.8	7.9	3.6	5.9
3"	7.6	10.8	4.3	8.0
3½"	9.2	13.5	5.0	9.8
4"	10.9	16.4	5.6	11.8
5"	14.8	23.5	7.8	17.3
6"	19.2	31.7	9.3	23.1
8"	28.6	50.8	16.9	40.1
10"	40.5	74.6		

- For additional information on sprinkler systems, see RedBuilt's *Sprinkler System Installation Guide* (available online at redbuilt.com)

Approximate Weights of RedBuilt™ Products

	Series	PLF Weight
Trusses	Red-L™	3.75–4.25
	Red-W™	4.50–5.25
	Red-S™	4.75–5.75
	Red-M™	8.00–9.00
	Red-H™	10.00–12.00
Joists	Red-I45™	2.2–3.5
	Red-I65™	3.0–5.8
	Red-I90™	4.2–6.6
	Red-I90H™	4.6–7.1
	Red-I90HS™	6.0–9.1

Structural Composite Lumber	Density (pcf)
2.0E RedLam™ LVL	42

- PLF Unit Weight = (density) x (width) x (depth)

SNOWDRIFT LOADING

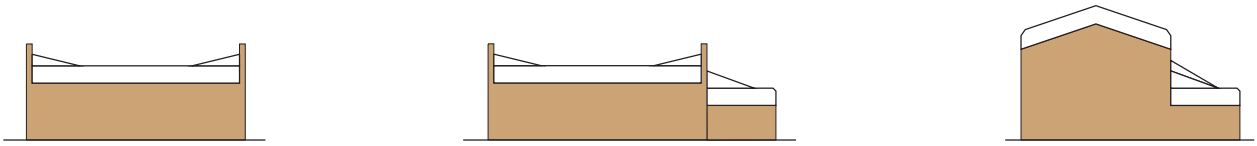

Wind direction, site exposure, and roof type and shape are some of the factors that can dramatically influence the accumulation of snow on a roof structure. ASCE 7 (*Minimum Design Loads for Buildings and Other Structures*) and the applicable building code, as well as other local state and regional codes, provide guidelines for calculating snowdrift loadings on all types of building construction.

Drifts usually occur at locations of discontinuity in a roof, such as at parapet walls, valleys, or where a high roof meets a low roof. Closer on-center spacing or additional support may be required at these locations.

The examples above illustrate potential snowdrift conditions. The project design professional is responsible for determining any additional loads due to snow drifting.

TECHNICAL SUPPORT AND ANALYSIS

Technical Support Organization and Functions

RedBuilt has four strategically located Design Centers staffed by professional engineers and designers. Their role is to provide technical support and service to our RedBuilt representatives, the professional design community, and the manufacturing plants. Design Center personnel have access to extensive test data, production standards, building code product acceptance criteria, and the most current computer design software.

The Design Centers work closely with our RedBuilt representatives and can provide the following services:

- Review and analysis of potential applications submitted by our RedBuilt representatives
- Drawings showing placement, bearing conditions, dimensions, and installation suggestions
- Custom design of the product
- Assistance in resolving field problems should they arise

This design guide contains technical data and design information frequently required by the design professional when using our products. Because of the variety of possible conditions, the design professional is strongly encouraged to request support from RedBuilt Design Centers through one of our representatives.

Product Application Assumptions

Our warranty is subject to an adequate supporting structure for our products. The design of the entire structure is not the role of RedBuilt, nor can we assume accountability for the full function of the roof or floor system. We can only be responsible for the internal design integrity of our own products, which are structural components of roof and floor systems that are necessarily designed by others.

Our warranty is also subject to continuous lateral support to the compression chord of our products unless specific design provisions account for other lateral support conditions. Continuous lateral support is provided by 8d (2½") nails at 24" on-center (minimum) for Red-L™ and Red-W™ trusses; and by 8d (2½") nails at 12" on-center (minimum), staggered, to each of the double chord members for Red-S™, Red-M™, and Red-H™ trusses; all connected to an adequate diaphragm or total lateral strength system.

The magnitude, direction, and location of all design loads are as specified by the building designer. The review of this loading by our personnel is only for purposes of designing our product.

Other application assumptions are referenced on the terms and conditions of our purchase agreement contract.

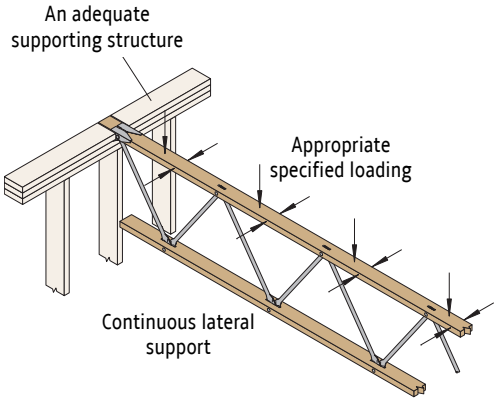

Analysis Procedure

RedBuilt™ open-web trusses are analyzed as pin-connected trusses with continuity in the top chord member, which receives the superimposed loading. Allowable truss-member forces are designated in the product acceptance criteria or derived from material stresses therein. Chord members are analyzed considering both net section at panel points and gross sections between the panels. Allowable web member forces consider gross and net sections, pin bearing and buckling. Pin-connection details consider allowable bearing in the wood for both parallel and perpendicular-to-grain direction. Reaction detail analysis includes allowable bearing, induced moments where applicable, and detail stresses. Stress and deflection are calculated by the displacement method. All of the above is substantiated through continual testing.

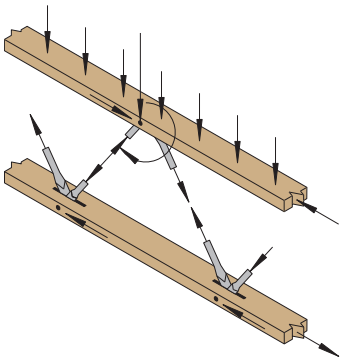

RedBuilt Recommended Deflection Criteria

Full-scale tests have shown repeatedly that RedBuilt™ products have deflection characteristics that are consistently predictable by calculation, with minimal set after load withdrawal.

The graph below shows that RedBuilt's recommended deflection limit for residential and commercial floors is more restrictive than the minimum required by typical building codes. The floor load tables shown on pages 6–11 were developed based on the **Commercial Floor Deflection Limit** shown in the graph below.

Floors:

- Maximum deflection at live load limited as indicated below
- Movable partition loads need not be considered

Roofs:

- Sloped Roofs—¼" to 12" per foot, maximum deflection L/180 at total load
- Plaster Ceilings—Also check L/360 at live load

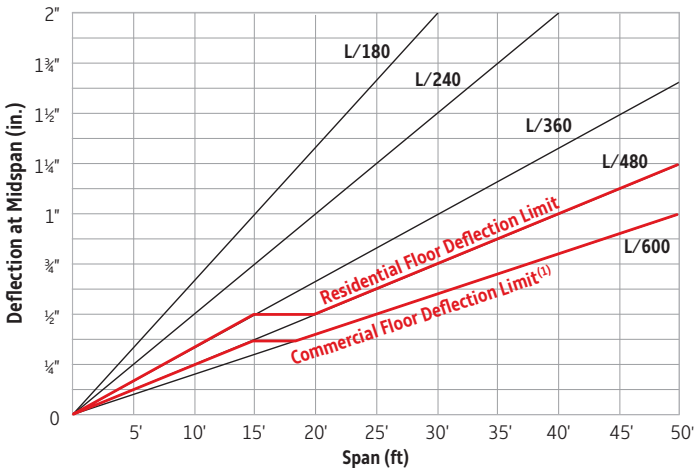

(1) For live load applications greater than 50 psf, check the L/600 deflection limit using a 50 psf live load, and check the code-prescribed deflection limit using the full live load.

Deflection criteria will vary by application. In a roof system, excessive deflection would be unsightly and could cause ceiling cracks and/or drainage problems. Floor systems, however, have entirely different—and usually much more restrictive—deflection requirements due to an occupant's perception of floor performance and feel.

The fundamental frequency of a floor system can be a good predictor of performance. Contact RedBuilt to discuss floor system performance for applications that are sensitive to vibration.

Deflection Calculations

Deflections for open-web trusses can be closely approximated by standard beam formulas, assuming that the chord members act as the resistance to deflection with the modulus of elasticity (E) of the chords adjusted to allow for the deflection of the webs. Thus, the product of the moment of inertia (I) and the effective modulus of elasticity (E) is as shown in the **Truss Rigidity Properties** table below.

For uniformly loaded simple spans, the mid-span deflection (in inches) becomes:

$$\Delta = \frac{22.5wL^4}{EI}$$

Where:

w = Uniform load in plf
L = Span in feet
d = The average pin-to-pin depth of the truss in inches, which is the average depth of the truss minus the following:

Red-L™ and Red-W™ trusses. . . . . 1.5 inches
Red-S™ trusses. . . . . 2.3 inches
Red-M™ trusses . . . . . 3.5 inches
Red-H™ trusses . . . . . 5.5 inches

Truss Rigidity Properties

Truss Series	EI Truss Only (Roof)	EI Nailed Floor	EI Glue-Nailed Floor
Red-L™	5.26 x 10^6d^2	5.69 x 10^6d^2	6.03 x 10^6d^2
Red-W™	6.78 x 10^6d^2	7.20 x 10^6d^2	7.54 x 10^6d^2
Red-S™	6.94 x 10^6d^2	7.41 x 10^6d^2	7.79 x 10^6d^2
Red-M™	10.06 x 10^6d^2	10.60 x 10^6d^2	11.02 x 10^6d^2
Red-H™	15.93 x 10^6d^2	16.54 x 10^6d^2	17.03 x 10^6d^2

CAMBER CRITERIA

The manufacture of RedBuilt™ open-web trusses includes the ability to provide a specified camber for appearance. Camber must be considered on an individual job basis, although certain policies derived from successful experiences are indicated. If camber is not specified in the order, our policy and considerations of other related job information will be used by our design department toward its selection.

Although excessive camber in any product may cause problems in framing, it is recommended that these policies be followed closely to avoid the serious problems caused by inadequate camber. In the case of flat roofs, the camber policy will be strictly adhered to unless it is shown that an adequate drainage system is provided to avoid ponding water and the resulting overloads.

Camber selection in structural members should include consideration for matching requirements of adjacent members of different length, as well as cantilevers meeting at a common elevation. In addition, consideration should be given to concentrated loads, non-load bearing walls, and special drainage problems. A RedBuilt representative is available to assist you in developing the camber requirements.

Recommended Camber for Floor and Roof

Loading Condition	Application	Recommended Camber	Minimum Recommended Camber
Snow Roof	Sloped Roofs (¼:12 min.)	DL Δ + ½ LL Δ	DL Δ + ¼ LL Δ
	Flat Roofs	TL	DL Δ + ½ LL Δ
Non-Snow Roof	All Roofs	1½ DL Δ	1¼ DL Δ
Floor	All Floors	1½ DL Δ	DL Δ

DL Δ = Dead load deflection
LL Δ = Live load deflection

Note: Movable partition loads are not to be considered in this policy.

NAILING INFORMATION

Minimum Nail Spacing

Nail Type	Nail Size	RedLam™ LVL			Sawn Lumber	
		Face	Edge		Face	Edge
			Truss Chord	Rim Board, Header, Beam		
8d[1]	0.113" x 2½"	2"	4"	3"	4"	2"
	0.131" x 2½"	2"	6"	3"	6"	2"
10d	0.128" x 3"	2"	6"	3"	6"	2"
	0.148" x 3"	3"	6"	4"[2]	6"	2½"
12d	0.128" x 3¼"	2"	6"	3"	6"	2"
	0.148" x 3¼"	3"	6"	4"[2]	6"	2½"
16d	0.135" x 3½"	3"	6"	4"	6"	2½"
	0.148" x 3¼"	3"	6"	4"[2]	6"	2½"
	0.162" x 3½"	4"	8"	8"[3]	8"	4"

(1) 14 gauge staples may be a direct substitute for 8d nails if a minimum penetration of 1" into the flange is maintained.

(2) Minimum spacing must be 5" for four rows of nails.

(3) Spacing may be reduced to 5" where nail penetration does not exceed 1⅜".

- If more than one row of nails is used, offset rows at least ½" and stagger. Maintain ⅜" minimum edge distance.
- Nailing pattern to be per plans and specifications, and nail spacing should comply with criteria listed on this page.
- For member stability, nail sheathing to the full length of the member (24" on-center, maximum).

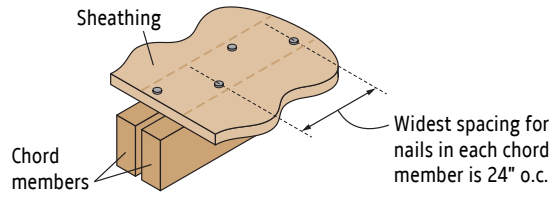

Do not use nails smaller than 8d (2½") or larger than 16d (3½")

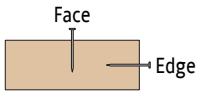

Flatwise orientation
(typical with Red-L™ and Red-W™ trusses and plywood edge blocking)

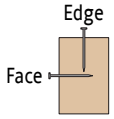

Edgewise orientation
(typical with Red-S™, Red-M™, and Red-H™ trusses and rim board, beams, and headers)

Refer to building code for allowable shear for wood diaphragms and the nail spacing requirements shown above.

SOUND DETAILS

Fire Assembly Details

For Fire Assemblies and other construction-related fire information, please refer to resources on our website at redbuilt.com.

Sound Assemblies and Noise Measurement

The ability of a wall or floor/ceiling system to reduce airborne sound transmission is measured using ASTM E90, and reported using the ASTM E413 Sound Transmission Class (STC) rating system. The ratings listed below—originally developed by the Acoustical and Insulation Materials Association and now considered a standard throughout the industry—are a practical reference for a range of STC numbers. In general, the higher the number, the better the acoustical performance. It is important to note that this table is valid only for a given level of background noise and should be used only for generalized comparisons.

Floor/ceiling systems can also be rated for impact noise transmitted through an assembly. Ratings are determined using the ASTM E492 Impact Insulation Class (IIC) system, and like STC ratings, a high IIC rating indicates significantly reduced impact noise.

STC Ratings

25	Normal speech can be understood quite clearly
30	Loud speech can be understood fairly well
35	Loud speech audible but not intelligible
42	Loud speech audible as a murmur
45	Must strain to hear loud speech
48	Some loud speech barely audible
50	Loud speech not audible

Testing

The acoustical assemblies provided below and on page 37 have been tested and rated by recognized acoustical laboratories, and the ratings shown are well within the acceptable range for multi-family buildings. However, in order to achieve these ratings, precautions should be taken to prevent flanking noise and sound leaks, and to ensure that actual construction conforms to the assembly shown.

79

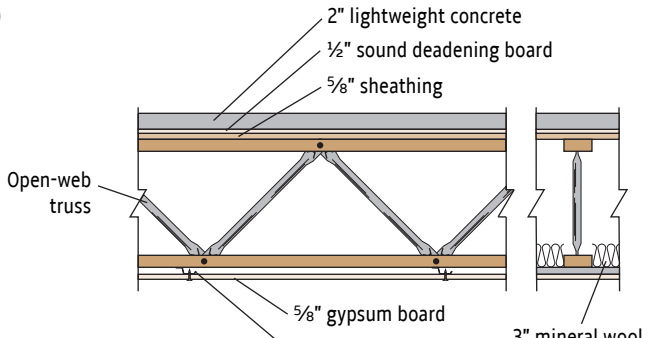

Field Test
FSTC = 60
WCR-Thunderbird

80

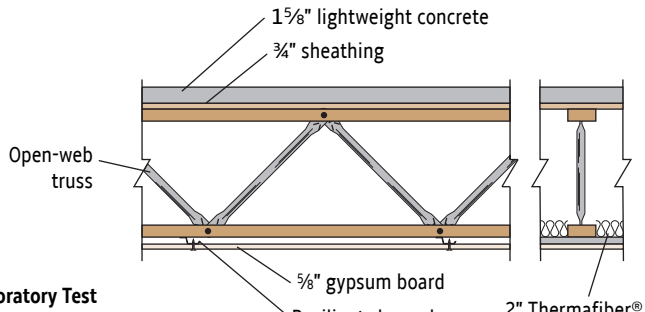

Laboratory Test
STC = 59
INR (no test)
RAL No. TL 70-37

81

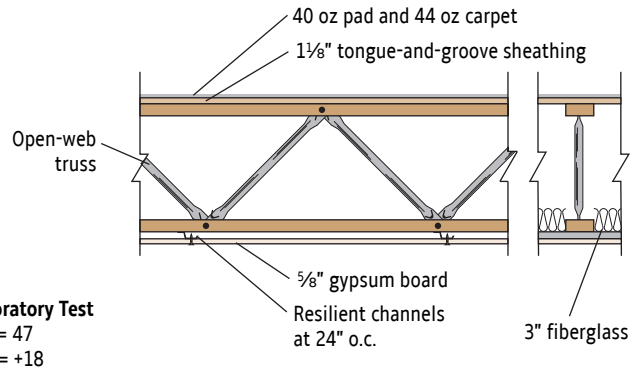

Laboratory Test
STC = 47
INR = +18
KAL 224-35-65

82

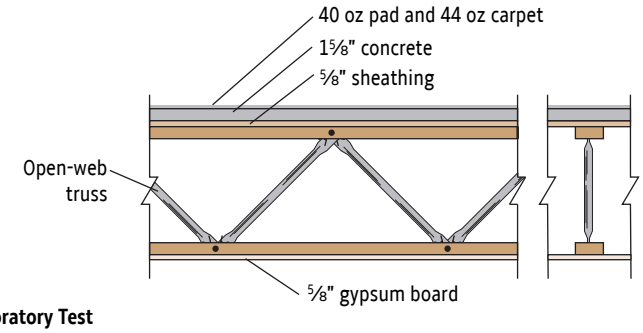

Laboratory Test
STC = 46
INR = +11
KAL 224-38-65

83

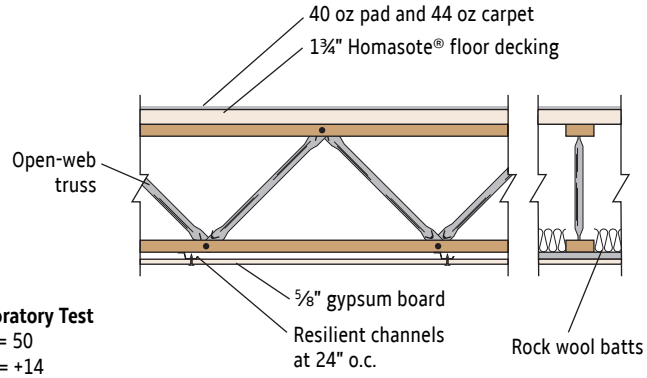

Laboratory Test
STC = 50
INR = +14
KAL 858-5-70

84

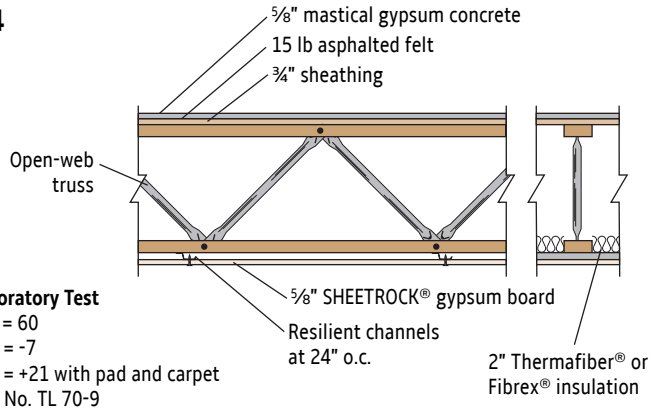

Laboratory Test
STC = 60
INR = -7
INR = +21 with pad and carpet
RAL No. TL 70-9

85

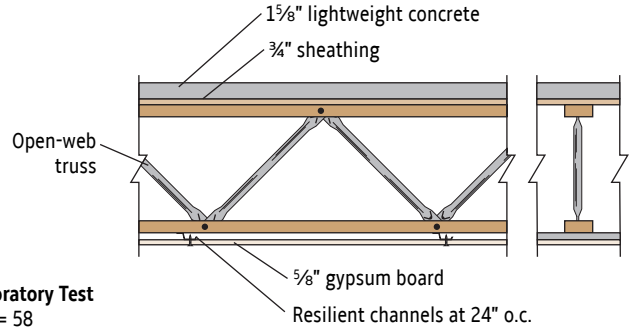

Laboratory Test
STC = 58
INR = +29 with pad and carpet
RAL No. TL 70-44

86

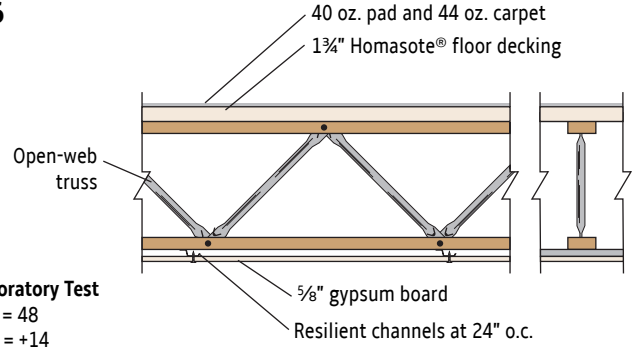

Laboratory Test
STC = 48
INR = +14
IIC = 65
KAL 858-4-70

87

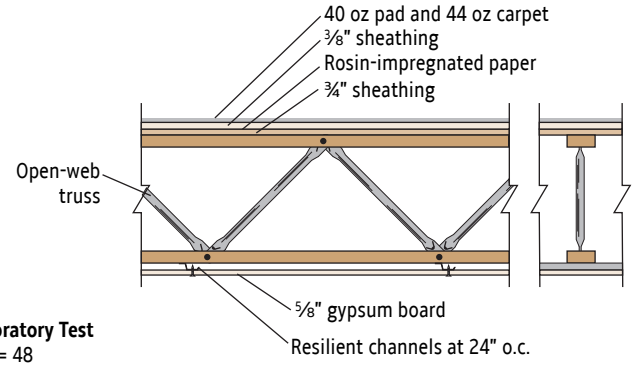

Laboratory Test
STC = 48
INR = +11 with pad and carpet
RAL No. TL 70-48

88

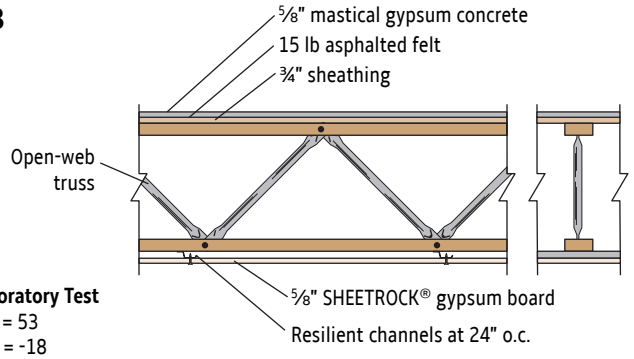

Laboratory Test
STC = 53
INR = -18
INR = +18 with pad and carpet
RAL No. IN 70-1 & IN 70-2

Fibrex® is a registered trademark of Fibrex® Insulations Inc. SHEETROCK® is a registered trademark of USG Corporation.
Homasote® is a registered trademark of Homasote Company. Thermafiber® is a registered trademark of Thermafiber, Inc.

Q1: How do I develop the most cost effective solution when using open-web trusses?

A1: The open-web truss load tables show the maximum load-carrying capacity of a given truss, but not necessarily the most cost-effective truss type or depth for the application. You can also use the **Specifying Economical Trusses** section on page 4 of this guide or you can contact your local RedBuilt representative at 1-866-859-6757 for assistance in finding the most economical solution for your application.

Q2: Can RedBuilt™ open-web trusses be used as drag struts?

A2: Yes. RedBuilt can design the chords of open-web trusses for specific axial loads. These loads must be provided by the design professional.

Q3: What is MSR lumber?

A3: Machine stress rated (MSR) lumber refers to sawn lumber that is mechanically evaluated for strength and stiffness, and then visually graded. Sawn lumber that is rated as MSR is regarded as high-quality material, and MSR is the only grade of sawn lumber used by RedBuilt in open-web truss chord components.

Q4: Are your open-web trusses covered by a warranty?

A4: Yes. RedBuilt warrants that its products will be free from manufacturing errors or defects in workmanship and material. In addition, provided that the product is correctly installed and used, the company warrants the adequacy of its design for the normal and expected life of the building. A copy of the warranty can be found on the back cover of this guide or on our website at www.RedBuilt.com.

Q5: Does RedBuilt provide any sprinkler system or fire-rated assembly details?

A5: Yes. RedBuilt provides a number of sprinkler system suspension and fire assembly details in AutoCAD® format, which can be downloaded from our website at redbuilt.com on the **AutoCAD Details** page.

Q6: What type of certification and quality assurance do open-web trusses have?

A6: RedBuilt™ open-web trusses are manufactured in accordance with rigorous standards, and they are monitored by a third-party quality control agency (PFS Corporation). These standards are modeled after ISO 9000.

Q7: How can I contact a RedBuilt representative?

A7: You can find your local RedBuilt representative by calling 1-866-859-6757 or visiting our website at redbuilt.com.

Q8: Can I modify or repair RedBuilt™ open-web trusses?

A8: On rare occasions, repairs or modifications can be made to RedBuilt™ open-web products—but only if the materials and instructions are provided by RedBuilt. Contact your local RedBuilt representative for more information or call 1-866-859-6757.

Q9: Can I treat open-web products with fire-retardant or preservative?

A9: RedBuilt does not recommend or warrant the use of field-applied treatments. The use of these products may reduce the design load-carrying capacity of the members. Instead, RedBuilt requires that dry-use conditions be maintained.

Q10: Why are some RedBuilt™ open-web trusses painted red on one end?

A10: Many truss applications require the use of non-symmetrical trusses. Typically this is due to non-uniform design loading patterns. Non-symmetrical trusses are marked with red paint on one end, and the layout drawings provided by RedBuilt will specify where the red end is to be installed.

Q11: Do RedBuilt™ open-web trusses meet the requirements set forth in the U.S. Green Building Council's (USGBC) Leadership in Energy and Environmental Design (LEED) standard?

A11: LEED–NC (new construction) is a commonly used building rating system designed to accelerate the development of green building practice. While products such as RedBuilt™ open-web trusses are not LEED certified on an individual basis, they may contribute to point totals for a "whole building" certification. For example, the following items may be viewed as contributors toward points in the LEED rating system:

- The **Low Emitting Materials** section (EQ 4.4) recognizes composite wood that is free from urea-formaldehyde resins. RedBuilt does not use urea-formaldehyde resins in any of its engineered lumber products. Material Safety Data Sheets (MSDS) are available at redbuilt.com.
- RedBuilt™ products may qualify for **Regional Materials (MR 5.1 and 5.2)** for projects located within a 500 mile radius of Portland, OR.
- Tubular steel webs and bearing clips used in RedBuilt open-web trusses may qualify for **Recycled Content (RC 4.1 and 4.2)**. For more information consult your RedBuilt technical representative.

1.0 General

1.1 Scope
This work includes the complete furnishings and installation of all RedBuilt™ open-web trusses, as shown on the drawings herein specified and necessary to complete the work.

1.2 Code Approvals
These products shall be designed and manufactured to the standards set forth in the International Code Council Report No. ESR-1774.

1.3 Related Work Specified Elsewhere
A. Carpentry and millwork
B. Glu-laminated members

1.4 Design
A. Products: RedBuilt™ products shall be designed to fit the dimensions and loads indicated on the plans.

B. Design Calculations: When requested, a complete set of design calculations shall be prepared by RedBuilt.

1.5 Submittals
A. Drawings: Drawings showing layout and detail necessary for determining fit and placement in the building shall be provided by RedBuilt.

B. Production: Fabrication and/or cutting shall not proceed until the architect and/or engineer have approved the submittal package.

2.0 Products

2.1 Materials
Materials shall comply with ICC-ES Report No. ESR-1774. Chord members, web members, connecting pins and bearing hardware/attachments shall be of material and size as required by design.

2.2 Fabrication
The trusses shall be manufactured by RedBuilt in a plant listed in the report referred to above and under the supervision of an approved third-party inspection agency.

2.3 Tolerances
Length, bearing-to-bearing:
For trusses up to 30 ft: ±1/8"
For trusses greater than 30 ft: ±1/4"
Depth: ±1/8"

CAMBER

Span	Individual Truss Tolerance Variation from Design	Variation Between Any Two Trusses of the Same Type
0 to 30'	±1/8"	1/4"
>30' to 60'	±3/8"	1/4"
>60' to 120'	±1/2"	1/2"

2.4 Identification
Each of the trusses shall be identified by a stamp indicating the truss series, ICC-ES report number, manufacturer's name, plant number, date of fabrication, and the independent inspection agency's logo.

2.5 Hardware
Not applicable.

3.0 Execution

3.1 Installation
RedBuilt™ open-web trusses, if stored prior to installation, shall be stored in a vertical position and protected from the weather. They shall be handled with care so they are not damaged. The open-web trusses shall be installed in accordance with the plans and any RedBuilt drawings and installation suggestions. Temporary construction loads that cause stresses beyond design limits are not permitted. Installation bracing is required to keep trusses straight and plumb, and to ensure adequate lateral support for the individual trusses and the entire system until the sheathing material has been applied. RedBuilt's recommended method for bracing is to use the strut bracing supplied by RedBuilt.

3.2 Installation Review
Prior to enclosing the trusses, the Contractor shall give notification to the RedBuilt representative to provide an opportunity for review of the installation.

3.3 Performance Standards
Not applicable.

3.4 Fire Rating/Sound Rating
Fire and sound ratings are to be established in accordance with the assemblies detailed in ICC-ES Report No. ESR-1774, or the *Directory of Listed Products* published by Intertek Testing Services.

3.5 Warranty
The products delivered shall be free from manufacturing errors or defects in workmanship and material. The products, when correctly installed and maintained, shall be warranted to perform as designed for the normal and expected life of the building.

4.0 Alternates and/or Equals

4.1 Base Bid
Due to the customized detailing and engineering characteristics of the roof and/or floor framing assembly, it is a requirement that open-web trusses be used in the base bid.

4.2 Alternate Manufacturers
Other manufacturers' bids are to be listed in the alternate section of your proposal. All framing plans, detailing, and calculations for the alternate bids will be reviewed by the owner, architect, and engineer for structural performance, possible conflicts with related trades, and compatibility with the overall building requirements and building code.

4.3 Alternate Products
Alternate products will only be permitted if written approval and acceptance is obtained by both architect and owner at least seven days prior to the bid date. Any monetary savings that may be realized by using an alternate product shall be forwarded to the owner.

4.4 Acceptable Alternatives
At the discretion of the specifier of record, accepted alternates will be listed on the final addendum prior to the bid date.

SERVICE AND SUPPORT YOU CAN COUNT ON.

RedBuilt is committed to creating superior structural solutions. How? By offering efficient structural building products supported by a broad range of services.

- Our team of RedBuilt representatives—one of the industry's largest—isn't afraid to get its hands dirty. We can help with technical information, installation questions or code compliance.
- At RedBuilt, our goal is to help you build solid and durable structures. A limited warranty for our products is in effect for the expected life of the building.
- Call us with a problem that you believe may be caused by our products, and our representative will contact you within one business day to evaluate the problem and help solve it—**GUARANTEED.**


PRODUCT WARRANTY

RedBuilt warrants that its products will be free from manufacturing errors or defects in workmanship and material. In addition, provided the product is correctly installed and used, the company warrants them adequacy of its design for the normal and expected life of the building.

Ted Osterberger, CEO

RedBUILT

200 E. Mallard Drive | Boise, Idaho 83706 | 866.859.6757 | redbuilt.com

RED0016-320

CONTACT US

1.866.859.6757

redbuilt.com

200 E. Mallard Drive, Boise, ID 83706

P.O. Box 60, Boise, ID 83707

© 2020 RedBuilt LLC. All rights reserved.

RED0035-11/26

This document supersedes all previous versions. If this is more than one year old, contact your dealer or RedBuilt representative.