RedBUILT™

Red-I™ Joists



Including Red-I45,™ Red-I65,™ Red-I90,™ Red-I90H,™ and Red-I90HS™ Joists

- Lightweight for Fast Installation
- Resists Bowing, Twisting, and Shrinking
- Available in Long Lengths
- SFI® Chain of Custody Available
- Compatible with Standard Framing
- Works with Multiple Spans
- Limited Product Warranty
- Revit families available at redbuilt.com

RedSPEC™ Product Sizing Software

Download your free copy at RedBuilt.com.

Specify Red-I™ Joists for your next project using RedSpec™ single-member sizing software.

RedBuilt.com • 1.866.859.6757



TABLE OF CONTENTS

Introduction	2
Features and Benefits	3
Design Center Services	4
Red-I™ Joist Descriptions	4
Design Properties	5
Load Tables	6–9
8' On-Center Roof Span Table	9
Floor Details	10–12
Cantilevers and Outriggers	12–13
Roof Details	14
Rim Board	15
Red-I™ Blocking Panels	15
Web Stiffeners	16
Nailing Information	16
Wind or Seismic Connections	17
Fire and Sound	18
Allowable Holes	19
Deflection Criteria	20
Snowdrift Loading	20
Technical Support and Analysis	21
Q&A	22–23
Red-I™ Joist Specifications	24
Material Weights	25
RedSpec™ Sizing Software	26
Product Warranty	28

Welcome to RedBuilt

RedBuilt is an exciting business offering building solutions for a broad range of commercial and custom residential applications. In addition to pioneering unique manufacturing technologies, RedBuilt provides world-class service and technical support for architects, specifiers and builders.

RedBuilt gives you access to reliable, innovative products, including RedBuilt™ open-web trusses, Red-I™ joists, and RedLam™ LVL beams and headers. And we keep things simple: You'll work with just one service-oriented supplier to get all these products—plus the support you need to build smarter.

RedBuilt: A family of brand-name building products… a source for innovative ideas and solutions… a supplier that's simpler to do business with.

The RedBuilt™ Red-I™ Joist Advantage

Red-I™ joists are lightweight joists suitable for use in roofs and floors in custom residential, multifamily, institutional, and commercial applications. This product is available in multiple series so you can design the most cost-effective system. Other Red-I™ joist benefits include:

- **Dependable Delivery**—RedBuilt plants are located in key market areas, enabling us to deliver materials quickly. Each plant is staffed with experienced personnel who can help solve problems and talk with you about any special project requirements.
- **Minimum Waste**—Red-I™ joists are manufactured to resist twisting and shrinking, and they can be cut to size at the factory so there's virtually no time or material waste prior to installation.
- **Compatibility**—All Red-I™ joists fit into wood frame, masonry, or steel construction, and they can accommodate a wide variety of decking and ceiling materials—including wood, plywood, steel, and gypsum.
- **Easy Mechanical Access**—Knockout holes for ventilation and flexible conduit are provided in the web of the Red-I™ joists. The web can also be cut or drilled to accommodate larger ductwork (see page 19), so costly suspended ceilings can often be eliminated.

ABOUT THIS GUIDE

The *Red-I™ Joist Specifier's* guide is one of several guides that offer technical information and design recommendations for RedBuilt™ products. This guide provides architects, designers, and engineers with information regarding Red-I™ joists for commercial and custom residential applications.

Product Selection

This guide provides specifiers with technical information about the RedBuilt™ Red-I™ joist product line. However, complex or custom applications can often make specifying the the right products in the right places a challenge—especially when you have factors such as span, wind, load-carrying capacity and other design constraints to consider. But whatever your project entails, RedBuilt is here to help. Your local RedBuilt technical representative, along with our Design Center team, can assist you in choosing the best products and designing the best system for your specific application.

Contact us for help with any of the following:

- Product selection
- Building department calculations
- Complete cost analysis
- System selection (system packages can include horizontal framing, load-carrying beams, headers, wall framing, mansard framing, and accessories)

Products for Every Application

In addition to Red-I™ joists, RedBuilt offers a variety of other engineered lumber products that are ideal for use in commercial and custom residential projects. For more information, contact your RedBuilt technical representative or visit redbuilt.com to download literature for products such as tapered Red-I™ joists, open-web trusses, and RedLam™ LVL.

Unsurpassed Technical Support

RedBuilt has one of the largest networks of technical representatives in the business. Their services include consultation, computer-assisted design and layout, delivery coordination, and installation review. They can suggest cost-reduction techniques and check special application requirements. In addition, they're backed by a staff of professional engineers who provide comprehensive technical support when needed. Special requests are accommodated wherever practical, and they offer cost analysis, engineering analysis, assistance with building code approvals—even the creation of special product applications for more creative designs. The goal of RedBuilt technical support is to help architects and engineers achieve quality design applications with the most cost-efficient product selection possible.



Our network of technical representatives offers a wide range of services to help guide your projects through planning and construction.

Resource Efficiency

Consider all the positive attributes of wood when selecting your building material of choice. In addition to its structural properties, high strength-to-weight ratio, and ease of construction, wood is a naturally occurring, renewable resource that requires less energy to produce than steel or concrete. And it sequesters carbon—whether on the stump or in your structure.

Our Red-I™ joists, as well as other RedBuilt™ products, are made with responsibly sourced fiber and are available as SFI® Chain of Custody certified material. Whether you're looking for LEED® certification or simply want to ensure efficient use of raw materials, we can help. By making better use of every tree, RedBuilt produces cost-effective, consistently available engineered wood products that reduce environmental impact. The result is a quality wood product that offers superior strength and reliable performance.

SUSTAINABLE FORESTRY INITIATIVE
SFI-01 969

VERIFIED by SCS GLOBAL SERVICES
ENVIRONMENTAL PRODUCT DECLARATION
BASED ON LCA

DESIGN CENTER SERVICES

Upon request, RedBuilt can provide the following services for the products described in this guide:

- A complete design package including layout drawings (placement diagrams) and detailed design calculations.
- Review and analysis of the application.
- Drawings and/or calculations sealed by a professional engineer.

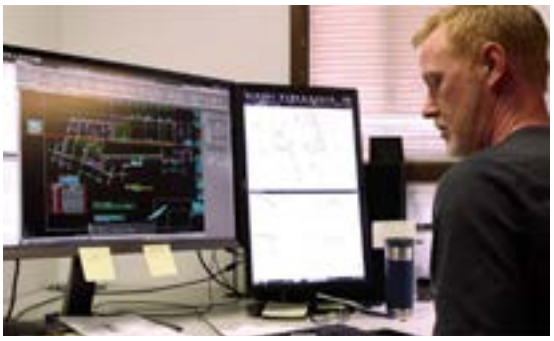

Our technical support team offers professional capabilities in the design and application of all RedBuilt™ products.

Installation Review

Although responsibility for proper installation lies with the contractor-builder, RedBuilt provides detailed suggestions and guidelines for installation. If requested, a RedBuilt representative will visit the site to verify the contractor's understanding of proper installation. RedBuilt professional engineers also are available to help solve jobsite application problems.

Engineering Responsibility Position Statement

RedBuilt is a manufacturer of proprietary structural components.

It employs a staff of professional engineers to aid in the development, manufacture, and marketing of its products. RedBuilt does not replace or accept the responsibility of the design professional of record for any structure.

RedBuilt accepts the delegation of engineering responsibility only for the products it manufactures, provided that the application conditions are specified by the design professional of record, or other responsible party when a design professional is not engaged. RedBuilt provides engineering in the design of its products and does not displace the need on any project for a design professional of record.

RED-I™ JOIST DESCRIPTIONS

This guide covers five series of joists: Red-I45™, Red-I65™, Red-I90™, Red-I90H™, and Red-I90HS™. These joists are primarily intended for commercial applications such as retail stores, office buildings, schools, restaurants, multi-family, hotels, warehouses, and nursing homes. They are typically designed, manufactured, and sold by RedBuilt for each specific job. Contact your RedBuilt representative for more information.

Some series of Red-I™ joists are available with tapered profiles for use in certain roof applications. Contact your RedBuilt representative for determining availability and for application assistance or see the *Tapered Red-I65T™ Joists* guide.

Red-I™ joists are normally produced without camber. However, camber is available at 2,250' radius as a special order for Red-I45™, Red-I65™, Red-I90™, Red-I90H™ series joists. Camber is not recommended for floors, or for multiple-span or cantilever applications.

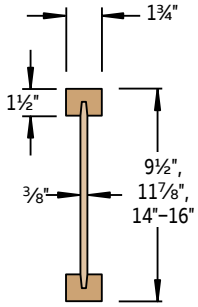

Red-I45™

Top and bottom flanges of 1½" x 1¾" RedLam™ LVL with ⅜" OSB web.

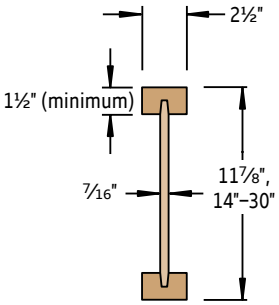

Red-I65™

Top and bottom flanges of 1½" (minimum) x 2½" RedLam™ LVL with 7/16" OSB web.

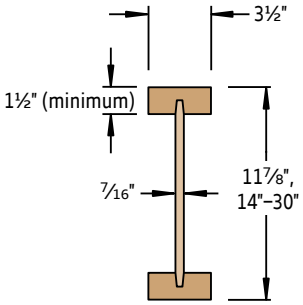

Red-I90™

Top and bottom flanges of 1½" (minimum) x 3½" RedLam™ LVL with 7/16" OSB web.

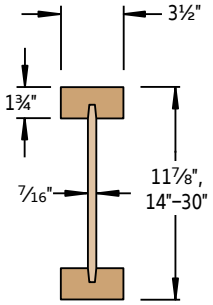

Red-I90H™

Top and bottom flanges of 1¾" x 3½" RedLam™ LVL with 7/16" OSB web.

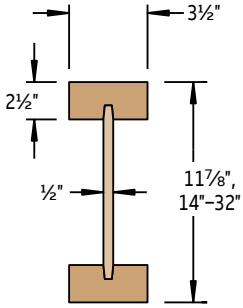

Red-I90HS™

Top and bottom flanges of 2½" x 3½" RedLam™ LVL with ½" OSB web.

- Red-I65™ available in tapered profile. Check with your technical representative for availability.
- Red-I90HS™ provides increased bending strength and stiffness for heavy loads and 8' on-center roof sytems.
- roof sytems Joist depths from 14" to 32" are available in 2" increments.

WARNING: Drilling, sawing, sanding or machining wood products can expose you to wood dust, a substance known to the State of California to cause cancer. Avoid inhaling wood dust or use a dust mask or other safeguards for personal protection. For more information go to www.P65Warnings.ca.gov/wood.

Building Codes and Product Acceptance: See ICC ESR-2994 and LABC/LARC Supplements, DSA IR 23-9

Joist Depth	Joist Weight (lb/ft)	Reference Design Values												
		Moment[1] M_r (ft-lb)	Shear[2] V_r (lb)	EI (10^6 in^2-lb)	EI[3] Red-I™ Joist with Nailed Floor Sheathing (10^6 in^2-lb)	EI[3] Red-I™ Joist with Glue-Nailed Floor Sheathing (10^6 in^2-lb)	End Reaction (lb)[4][5]				Intermediate Reaction (lb)[4][5]			
							1¾" Bearing		3½" Bearing		3½" Bearing		5¼" Bearing	
							Web Stiffeners[7]		Web Stiffeners[7]		Web Stiffeners[7]		Web Stiffeners[7]	
							No	Yes	No	Yes	No	Yes	No	Yes
Red-I45™ Joist														
9½"	2.2	3,620	1,590	185	221	250	1,015	NA	1,560	NA	2,025	NA	2,575	NA
11⅞"	2.5	4,685	1,785	319	375	420	1,015	1,225	1,560	1,785	2,025	2,385	2,575	2,930
14"	2.8	5,570	1,960	474	553	615	1,015	1,225	1,560	1,915	2,025	2,385	2,575	2,930
16"	3.0	6,390	2,120	653	756	839	1,015	1,225	1,560	1,915	2,025	2,385	2,575	2,930
Red-I65™ Joist														
11⅞"	3.6	6,750	2,255	450	512	561	1,375	1,745	1,885	2,255	2,745	3,120	3,365	3,735
14"	3.9	8,030	2,540	666	752	821	1,375	1,750	1,885	2,505	2,745	3,365	3,365	3,985
16"	4.2	9,210	2,810	913	1,025	1,116	1,375	1,750	1,885	2,625	2,745	3,490	3,365	4,105
18"	4.4	10,380	3,080	1,205	1,348	1,462	1,375	1,750	1,885	2,750	2,745	3,615	3,365	4,230
20"	4.7	11,540	3,345	1,545	1,722	1,864	NA	1,750	NA	2,875	NA	3,740	NA	4,355
22"	5.0	12,690	3,615	1,934	2,149	2,322	NA	1,750	NA	3,000	NA	3,860	NA	4,480
24"	5.3	13,830	3,200	2,374	2,632	2,838	NA	1,750	NA	3,125	NA	3,875	NA	4,605
26"	5.5	14,960	3,200	2,868	3,172	3,416	NA	1,750	NA	3,200	NA	4,725(8)	NA	5,345(9)
28"	5.8	16,085	3,200	3,417	3,772	4,056	NA	1,750	NA	3,200	NA	4,850(8)	NA	5,470(9)
30"	6.1	17,205	3,200	4,025	4,434	4,762	NA	1,750	NA	3,200	NA	4,975(8)	NA	5,590(9)
Red-I90™ Joist														
11⅞"	4.6	9,605	2,255	621	687	741	1,400	1,715	1,885	2,200	3,350	3,665	3,965	4,285
14"	4.9	11,430	2,540	913	1,005	1,079	1,400	1,875	1,885	2,355	3,350	3,825	3,965	4,440
16"	5.2	13,115	2,810	1,246	1,366	1,462	1,400	2,030	1,885	2,515	3,350	3,980	3,965	4,600
18"	5.4	14,785	3,080	1,635	1,786	1,908	1,400	2,030	1,885	2,515	3,350	3,980	3,965	4,600
20"	5.7	16,435	3,345	2,085	2,272	2,422	NA	2,190	NA	2,675	NA	4,140	NA	4,755
22"	6.0	18,075	3,615	2,597	2,824	3,006	NA	2,345	NA	2,830	NA	5,090	NA	5,705
24"	6.3	19,700	3,400	3,172	3,442	3,659	NA	2,345	NA	2,830	NA	5,405	NA	6,020
26"	6.5	21,315	3,400	3,814	4,132	4,387	NA	2,450	NA	2,990	NA	6,180(8)	NA	6,795(9)
28"	6.8	22,915	3,400	4,525	4,895	5,191	NA	2,450	NA	3,145	NA	6,335(8)	NA	6,800(9)
30"	7.1	24,510	3,400	5,306	5,732	6,073	NA	2,450	NA	3,145	NA	6,655(8)	NA	6,800(9)
Red-I90H™ Joist														
11⅞"	4.6	10,960	2,300	687	755	810	1,400	1,715	1,885	2,200	3,495	3,810	4,100	4,420
14"	4.9	13,090	2,600	1,015	1,109	1,185	1,400	1,875	1,885	2,355	3,495	3,970	4,100	4,575
16"	5.2	15,065	2,880	1,389	1,512	1,610	1,400	2,030	1,885	2,515	3,495	4,130	4,100	4,735
18"	5.4	17,010	3,160	1,827	1,982	2,106	1,400	2,030	1,885	2,515	3,495	4,130	4,100	4,735
20"	5.7	18,945	3,445	2,331	2,522	2,676	NA	2,190	NA	2,675	NA	4,285	NA	4,890
22"	6.0	20,855	3,725	2,904	3,136	3,321	NA	2,345	NA	2,830	NA	5,235	NA	5,840
24"	6.3	22,755	3,800	3,549	3,825	4,046	NA	2,345	NA	2,830	NA	5,425	NA	6,155
26"	6.5	24,645	3,800	4,266	4,590	4,850	NA	2,450	NA	2,990	NA	6,315(8)	NA	6,920(9)
28"	6.8	26,520	3,800	5,059	5,436	5,737	NA	2,450	NA	3,145	NA	6,470(8)	NA	7,080(9)
30"	7.1	28,380	3,800	5,930	6,363	6,710	NA	2,450	NA	3,145	NA	6,790(8)	NA	7,395(9)
Red-I90HS™ Joist														
11⅞"	6.0	16,050	2,320	900	974	1,034	1,835(6)	2,320(6)	2,150	2,320	3,995	4,650	4,690	5,345
14"	6.3	19,425	2,565	1,355	1,457	1,538	1,836(6)	2,565(6)	2,150	2,565	3,995	4,980	4,690	5,670
16"	6.6	22,550	2,790	1,876	2,008	2,113	1,837(6)	2,790(6)	2,150	2,790	3,995	4,980	4,690	5,670
18"	7.0	25,640	3,020	2,488	2,654	2,787	1,838(6)	3,020 (6)	2,150	3,020	3,995	5,310	4,690	6,000
20"	7.3	28,695	3,250	3,195	3,399	3,562	NA	3,250(6)	NA	3,250	NA	5,425	NA	6,330
22"	7.6	31,725	3,480	3,998	4,244	4,442	NA	3,475(6)	NA	3,480	NA	5,425	NA	6,330
24"	7.9	34,730	3,710	4,901	5,194	5,428	NA	3,496(6)	NA	3,710	NA	5,425	NA	6,655
26"	8.2	37,715	3,940	5,905	6,249	6,523	NA	3,497(6)	NA	3,940	NA	6,985(8)	NA	7,675(9)
28"	8.5	40,680	4,165	7,014	7,412	7,730	NA	3,498(6)	NA	4,165	NA	6,985(8)	NA	7,675(9)
30"	8.8	43,630	4,375	8,230	8,687	9,052	NA	3,499(6)	NA	4,375	NA	7,310(8)	NA	8,005(9)
32"	9.1	46,560	4,375	9,555	10,075	10,490	NA	3,500 (6)	NA	4,375	NA	7,640(8)	NA	8,335(9)

(1) Do not increase joist resistive moment properties by a repetitive-member-use factor.

(2) For possible increases in shear capacity see shear design information at right.

(3) For deflection calculation only. Assumes 24" joist spacing with a 24" span-rated panel.

(4) Interpolation between bearing lengths is permitted for allowable design reactions.

(5) Reaction capacity has been determined based on RedBuilt™ products. Allowable bearing on supporting members shall be checked.

(6) 2½" bearing length is required at end reactions.

(7) Refer to page 16 for web stiffener details.

(8) 5¼" bearing length is required at intermediate reactions.

(9) 7" bearing length is required at intermediate reactions.

- The stated allowable design properties are for loads of normal duration. Adjustments to the allowable design values shall be in accordance with the applicable code.

Red-I™ Joist Shear Design

When joists are used as simple span members, the design shear is equal to the shear at the face of the support.

When joists **up to 24" in depth** are used as multiple-span members, the design shear is the calculated shear at the interior support reduced by the following:

$$R = \frac{W}{\left(\frac{V_{12}}{100}\right)} \leq 18\%$$

Where: R = percent reduction
W = uniform load, plf
V_{12} = reference design shear for an 11⅞" deep joist, lb

LOAD TABLES

Instructions for Load Tables on pages 7–9

To size floor joists:

- Calculate total load and live load in pounds per linear foot (plf).
- Check both total load (100% TL) and live load (100% LL). Live load (100% LL) values may be increased with a glue-nailed floor system; contact your RedBuilt representative for assistance.

To size roof joists:

- Calculate total load in pounds per linear foot (plf).
- Check the appropriate snow load area (115% TL) value or non-snow load area (125% TL) value to determine the maximum allowable total load.

100% TL (Total Load)

Use this and the 100% LL to select floor member. This is the maximum allowable total load in pounds per linear foot of joist. Values are limited by deflection equal to L/240 at total load.

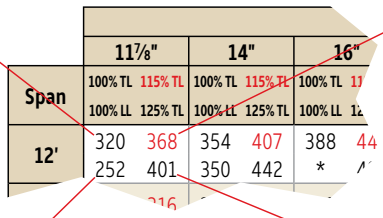

Span	11⅞"		14"		16"	
	100% TL	115% TL	100% TL	115% TL	100% TL	11
	100% LL	125% TL	100% LL	125% TL	100% LL	12
12'	320	368	354	407	388	44
	252	401	350	442	*	

115% TL (Total Load)

Use this to select roof member in snow load areas. This is the maximum allowable total load in pounds per linear foot of joist. Values are limited by deflection equal to L/180 at total load.

100% LL (Live Load)

Use this and the 100% TL to select floor member. This number is the maximum allowable live load capacity in pounds per linear foot of joist. Value is based on the **Commercial Floor Deflection Limit** shown on page 20.

125% TL (Total Load)

Use this to select roof member in non-snow load areas. This is the maximum allowable total load in pounds per linear foot of joist. Values are limited by deflection equal to L/180 at total load.

Consult local codes to verify deflection limits required for specific applications.

General Notes for Load Tables on pages 7–9

- Values shown are maximum allowable load capacities based on the following assumptions:
  - Simple span; horizontal clear distance between supports.
  - Uniformly loaded conditions with 2½" bearing length. Web stiffeners are assumed for joist depths greater than 9½". Other capacities may be possible with different criteria; contact your RedBuilt representative.
  - Positive drainage in roof applications (¼" per foot slope minimum).
  - Composite action is not considered for deflection.
  - **Floor Total Load** deflection limit is L/240.
  - **Floor Live Load** deflection limit is based on commercial deflection criteria shown on page 20.
  - **Roof Total Load** deflection limit is L/180.
- Camber (2,250' radius) is available for simple-span applications only (not available for Red-I90HS™). **Contact your RedBuilt representative for availability.**
- For span or loading conditions not covered by these tables (such as multiple spans or concentrated loads), contact your RedBuilt representative for assistance.

Visit RedBuilt.com to find your local representative.

Red-I45™ Joist Allowable Uniform Load (PLF)

Span	Depth							
	9½"		11⅞"		14"		16"	
	100% TL / 100% LL	115% TL / 125% TL	100% TL / 100% LL	115% TL / 125% TL	100% TL / 100% LL	115% TL / 125% TL	100% TL / 100% LL	115% TL / 125% TL
10'	245 160	282 307	288 257	331 360	299 *	344 373	299 *	344 373
12'	195 98	224 244	240 162	276 301	249 230	287 312	249 *	287 312
14'	129 64	165 173	186 107	214 233	214 154	246 268	214 205	246 268
16'	89 44	119 119	143 74	164 179	170 106	196 213	188 143	216 235
18'	64 28	85 85	107 47	130 141	135 69	155 168	154 92	178 193
20'		63 63	80 30	105 106	109 46	126 136	125 63	144 157
22'		48 48		81 81	89 35	104 113	104 48	119 130

Table Footnotes

* Indicates total load (TL) value controls.

• Red numbers refer to 115% total load (TL).

See Load Table Instructions and General Notes on page 6.

Red-I65™ Joist Allowable Uniform Load (PLF)

Span	Depth																			
	11⅞"		14"		16"		18"		20"		22"		24"		26"		28"		30"	
	100% TL / 100% LL	115% TL / 125% TL	100% TL / 100% LL	115% TL / 125% TL	100% TL / 100% LL	115% TL / 125% TL	100% TL / 100% LL	115% TL / 125% TL	100% TL / 100% LL	115% TL / 125% TL	100% TL / 100% LL	115% TL / 125% TL	100% TL / 100% LL	115% TL / 125% TL	100% TL / 100% LL	115% TL / 125% TL	100% TL / 100% LL	115% TL / 125% TL	100% TL / 100% LL	115% TL / 125% TL
10'	386 347	444 482	407 *	469 509	418 *	480 522	428 *	492 535	439 *	504 548	449 *	517 562	460 *	529 575	466 *	536 583	466 *	536 583	466 *	536 583
12'	322 220	371 403	340 310	391 426	349 *	401 436	358 *	411 447	366 *	421 458	375 *	432 469	384 *	442 480	389 *	448 487	389 *	448 487	389 *	448 487
14'	269 147	309 336	292 210	336 365	300 277	345 375	307 *	353 384	315 *	362 393	322 *	371 403	330 *	379 412	334 *	385 418	334 *	385 418	334 *	385 418
16'	206 102	237 258	245 146	282 307	262 194	302 328	269 249	309 336	276 *	317 345	282 *	325 353	289 *	332 361	293 *	337 366	293 *	337 366	293 *	337 366
18'	149 65	188 199	194 94	223 243	223 126	256 279	239 163	275 299	245 204	282 307	251 248	289 314	257 *	296 321	261 *	300 326	261 *	300 326	261 *	300 326
20'	111 44	148 148	157 64	181 197	181 86	208 226	204 112	234 255	221 140	254 276	226 172	260 283	231 206	266 289	235 *	270 293	235 *	270 293	235 *	270 293
22'	85 34	113 113	123 49	150 163	149 66	172 187	168 86	194 211	187 108	216 234	206 133	237 257	211 161	242 263	213 190	246 267	213 *	246 267	213 *	246 267
24'		88 88	96 38	126 129	126 52	145 157	142 68	163 177	158 85	181 197	173 105	199 217	189 127	217 236	196 151	225 245	196 177	225 245	196 *	225 245
26'		70 70	77 30	102 102	104 41	123 134	121 54	139 151	134 68	155 168	148 84	170 185	161 102	185 201	174 122	201 218	181 143	208 226	181 166	208 226
28'		56 56		83 83	84 33	106 112	104 44	120 130	116 55	133 145	127 69	147 159	139 83	160 174	150 100	173 188	162 117	186 202	168 136	193 210
30'		46 46		68 68		92 92	90 36	104 114	101 46	116 126	111 57	128 139	121 69	139 151	131 82	151 164	141 97	162 176	151 113	173 189
32'		38 38		56 56		77 77	75 30	92 100	89 38	102 111	98 47	112 122	106 57	122 133	115 69	133 144	124 81	143 155	133 95	152 166
34'		32 32		47 47		64 64		81 84	79 32	90 98	86 40	100 108	94 48	108 118	102 58	117 128	110 68	126 137	117 80	135 147
36'				40 40		54 54		71 71		81 88	77 34	89 97	84 41	97 105	91 49	105 114	98 58	113 122	105 68	121 131
38'				34 34		46 46		61 61		72 78	69 29	80 87	75 35	87 94	82 42	94 102	88 50	101 110	94 58	108 118
40'				29 29		40 40		52 52		65 67		72 78	68 30	78 85	74 36	85 92	79 43	91 99	85 50	98 106

LOAD TABLES

Red-I90™ Joist Allowable Uniform Load (PLF)

Span	Depth																			
	11⅞"		14"		16"		18"		20"		22"		24"		26"		28"		30"	
	100% TL / 100% LL	115% TL / 125% TL	100% TL / 100% LL	115% TL / 125% TL	100% TL / 100% LL	115% TL / 125% TL	100% TL / 100% LL	115% TL / 125% TL	100% TL / 100% LL	115% TL / 125% TL	100% TL / 100% LL	115% TL / 125% TL	100% TL / 100% LL	115% TL / 125% TL	100% TL / 100% LL	115% TL / 125% TL	100% TL / 100% LL	115% TL / 125% TL	100% TL / 100% LL	115% TL / 125% TL
14'	271	312	293	337	315	363	315	363	338	389	360	414	360	414	378	435	387	446	387	446
	192	339	268	367	*	394	*	394	*	423	*	450	*	450	*	473	*	484	*	484
16'	237	273	257	296	276	318	276	318	296	341	315	363	315	363	331	381	339	390	339	390
	134	297	189	321	249	346	*	346	*	370	*	394	*	394	*	414	*	424	*	424
18'	198	243	229	263	246	283	246	283	263	303	281	323	281	323	295	339	302	347	302	347
	87	264	124	286	164	307	209	307	258	329	*	351	*	351	*	369	*	378	*	378
20'	148	198	206	237	221	255	221	255	237	273	253	291	253	291	265	305	272	313	272	313
	59	198	85	257	113	277	144	277	179	297	217	316	*	316	*	332	*	340	*	340
22'	114	152	164	214	201	232	201	232	216	248	230	264	230	264	241	278	247	285	247	285
	45	152	65	219	87	252	112	252	140	270	170	287	203	287	239	302	*	309	*	309
24'	89	119	129	172	172	206	185	212	198	228	211	242	211	242	221	255	227	261	227	261
	35	119	51	172	69	224	89	231	111	248	135	264	162	264	191	277	222	284	*	284
26'	71	95	103	137	138	176	171	196	183	210	195	224	195	224	204	235	210	241	210	241
	28	95	41	137	55	184	71	213	89	229	109	243	131	243	155	256	181	262	208	262
28'		77	83	111	112	150	145	171	165	190	181	208	181	208	190	218	195	224	195	224
		77	33	111	45	150	58	186	73	207	89	226	108	226	127	237	149	243	172	243
30'		63		91	92	123	120	149	144	166	158	182	169	194	177	204	182	209	182	209
		63		91	37	123	48	160	60	180	74	198	89	211	106	222	124	227	143	227
32'		52		76	77	103	100	131	126	146	139	160	152	175	164	189	170	196	170	196
		52		76	30	103	40	133	50	158	62	174	75	190	89	206	104	213	120	213
34'		44		64		86	84	112	106	129	123	142	135	155	146	167	157	180	160	184
		44		64		86	33	112	42	140	52	154	63	168	75	182	88	196	102	201
36'		37		54		73	71	95	90	115	110	127	120	138	130	149	140	161	149	172
		37		54		73	28	95	36	120	44	138	54	150	64	162	75	175	87	187
38'		31		46		63		82	77	103	95	114	108	124	117	134	125	144	134	154
		31		46		63		82	31	103	38	124	46	135	55	146	65	157	75	168
40'				40		54		70		89	82	103	97	112	105	121	113	130	121	139
				40		54		70		89	33	110	40	122	47	132	56	142	65	151
42'				34		47		61		77	72	93	87	101	95	110	103	118	110	126
				34		47		61		77	28	96	34	110	41	119	49	128	57	137

Table Footnotes

* Indicates total load (TL) value controls.

• Red numbers refer to 115% total load (TL).

See Load Table Instructions and General Notes on page 6.

Red-I90H™ Joist Allowable Uniform Load (PLF)

Span	Depth																			
	11⅞"		14"		16"		18"		20"		22"		24"		26"		28"		30"	
	100% TL / 100% LL	115% TL / 125% TL	100% TL / 100% LL	115% TL / 125% TL	100% TL / 100% LL	115% TL / 125% TL	100% TL / 100% LL	115% TL / 125% TL	100% TL / 100% LL	115% TL / 125% TL	100% TL / 100% LL	115% TL / 125% TL	100% TL / 100% LL	115% TL / 125% TL	100% TL / 100% LL	115% TL / 125% TL	100% TL / 100% LL	115% TL / 125% TL	100% TL / 100% LL	115% TL / 125% TL
14'	271	312	293	337	315	363	315	363	338	389	360	414	360	414	378	435	387	446	387	446
	208	339	290	367	*	394	*	394	*	423	*	450	*	450	*	473	*	484	*	484
16'	237	273	257	296	276	318	276	318	296	341	315	363	315	363	331	381	339	390	339	390
	146	297	206	321	270	346	*	346	*	370	*	394	*	394	*	414	*	424	*	424
18'	211	243	229	263	246	283	246	283	263	303	281	323	281	323	295	339	302	347	302	347
	95	264	135	286	179	307	227	307	*	329	*	351	*	351	*	369	*	378	*	378
20'	162	217	206	237	221	255	221	255	237	273	253	291	253	291	265	305	272	313	272	313
	65	217	93	257	123	277	158	277	196	297	237	316	*	316	*	332	*	340	*	340
22'	125	167	180	215	201	232	201	232	216	248	230	264	230	264	241	278	247	285	247	285
	50	167	72	234	96	252	123	252	153	270	186	287	222	287	*	302	*	309	*	309
24'	98	131	142	189	185	212	185	212	198	228	211	242	211	242	221	255	227	261	227	261
	39	131	56	189	76	231	97	231	122	248	149	264	178	264	209	277	*	284	*	284
26'	78	104	113	151	152	196	171	196	183	210	195	224	195	224	204	235	210	241	210	241
	31	104	45	151	61	203	78	213	98	229	120	243	144	243	170	256	198	262	*	262
28'		84	92	123	124	165	158	182	170	195	181	208	181	208	190	218	195	224	195	224
		84	36	123	49	165	64	198	80	212	98	226	118	226	140	237	163	243	188	243
30'		69	76	101	102	136	132	170	158	182	169	194	169	194	177	204	182	209	182	209
		69	30	101	41	136	53	177	66	198	82	211	98	211	116	222	136	227	157	227
32'		57		84	85	114	111	148	139	168	158	182	158	182	166	191	170	196	170	196
		57		84	34	114	44	148	55	183	68	198	82	198	98	208	114	213	132	213
34'		48		70	71	95	93	124	118	149	142	164	149	171	156	180	160	184	160	184
		48		70	28	95	37	124	47	157	58	178	70	186	83	196	97	201	112	201
36'		41		60		81	79	106	100	133	123	146	139	160	148	170	151	174	151	174
		41		60		81	31	106	40	133	49	159	59	173	71	185	83	189	96	189
38'		35		51		69		90	86	114	106	131	124	143	135	155	143	165	143	165
		35		51		69		90	34	114	42	141	51	156	61	169	71	179	83	179
40'		30		44		60		78	74	99	92	118	111	129	122	140	131	151	136	157
		30		44		60		78	29	99	36	122	44	141	53	152	62	164	72	171
42'				38		52		68		86	80	106	97	117	110	127	119	137	127	146
				38		52		68		86	32	106	38	127	46	138	54	149	63	159

Red-I90HS™ Joist Allowable Uniform Load (PLF)

Span	Depth																					
	11⅞"		14"		16"		18"		20"		22"		24"		26"		28"		30"		32"	
	100% TL / 100% LL	115% TL / 125% TL	100% TL / 100% LL	115% TL / 125% TL	100% TL / 100% LL	115% TL / 125% TL	100% TL / 100% LL	115% TL / 125% TL	100% TL / 100% LL	115% TL / 125% TL	100% TL / 100% LL	115% TL / 125% TL	100% TL / 100% LL	115% TL / 125% TL	100% TL / 100% LL	115% TL / 125% TL	100% TL / 100% LL	115% TL / 125% TL	100% TL / 100% LL	115% TL / 125% TL	100% TL / 100% LL	115% TL / 125% TL
14'	327 / 263	376 / 409	362 / *	416 / 452	393 / *	452 / 492	426 / *	490 / 532	458 / *	527 / 573	490 / *	564 / 613	494 / *	568 / 617	494 / *	568 / 617	494 / *	568 / 617	494 / *	568 / 617	494 / *	568 / 617
16'	287 / 186	330 / 358	317 / 265	364 / 396	345 / *	396 / 431	373 / *	429 / 467	402 / *	462 / 502	429 / *	494 / 537	432 / *	497 / 541	432 / *	497 / 541	432 / *	497 / 541	432 / *	497 / 541	432 / *	497 / 541
18'	255 / 121	293 / 319	282 / 175	324 / 352	307 / 232	353 / 383	332 / 295	382 / 415	357 / *	411 / 447	382 / *	439 / 478	385 / *	443 / 481	385 / *	443 / 481	385 / *	443 / 481	385 / *	443 / 481	385 / *	443 / 481
20'	209 / 83	264 / 278	254 / 121	292 / 317	276 / 161	318 / 345	299 / 207	344 / 374	322 / 256	370 / 402	344 / 310	396 / 430	347 / *	399 / 433	347 / *	399 / 433	347 / *	399 / 433	347 / *	399 / 433	347 / *	399 / 433
22'	161 / 64	215 / 215	231 / 94	266 / 289	251 / 126	289 / 314	272 / 162	313 / 340	293 / 202	337 / 366	313 / 245	360 / 391	315 / 292	363 / 394	315 / *	363 / 394	315 / *	363 / 394	315 / *	363 / 394	315 / *	363 / 394
24'	127 / 50	169 / 169	185 / 74	244 / 247	230 / 100	265 / 288	249 / 129	287 / 312	268 / 161	309 / 336	287 / 197	330 / 359	289 / 235	333 / 362	289 / 276	333 / 362	289 / *	333 / 362	289 / *	333 / 362	289 / *	333 / 362
26'	101 / 40	135 / 135	149 / 59	199 / 199	201 / 80	245 / 266	230 / 104	265 / 288	248 / 131	285 / 310	265 / 160	305 / 332	267 / 192	307 / 334	267 / 226	307 / 334	267 / 262	307 / 334	267 / *	307 / 334	267 / *	307 / 334
28'	82 / 32	109 / 109	121 / 48	162 / 162	164 / 65	219 / 219	214 / 85	246 / 268	230 / 107	265 / 288	246 / 132	283 / 308	248 / 158	285 / 310	248 / 187	285 / 310	248 / 217	285 / 310	248 / *	285 / 310	248 / *	285 / 310
30'		90 / 90	100 / 40	133 / 133	136 / 54	181 / 181	177 / 70	230 / 236	215 / 89	247 / 269	230 / 109	264 / 287	232 / 132	266 / 290	232 / 156	266 / 290	232 / 182	266 / 290	232 / 210	266 / 290	232 / *	266 / 290
32'		75 / 75	83 / 33	111 / 111	113 / 45	151 / 151	148 / 59	197 / 197	187 / 75	232 / 250	216 / 92	248 / 270	217 / 111	250 / 272	217 / 131	250 / 272	217 / 154	250 / 272	217 / 177	250 / 272	217 / 203	250 / 272
34'		63 / 63	70 / 28	93 / 93	95 / 38	127 / 127	125 / 50	167 / 167	158 / 63	211 / 211	195 / 78	233 / 254	204 / 94	235 / 256	204 / 112	235 / 256	204 / 131	235 / 256	204 / 151	235 / 256	204 / 173	235 / 256
36'		53 / 53		79 / 79	81 / 32	108 / 108	106 / 42	142 / 142	135 / 54	180 / 180	167 / 66	220 / 222	193 / 80	222 / 241	193 / 96	222 / 241	193 / 112	222 / 241	193 / 130	222 / 241	193 / 149	222 / 241
38'		45 / 45		68 / 68		93 / 93	91 / 36	122 / 122	116 / 46	155 / 155	143 / 57	191 / 191	174 / 69	210 / 229	183 / 82	210 / 229	183 / 97	210 / 229	183 / 112	210 / 229	183 / 129	210 / 229
40'		39 / 39		58 / 58		80 / 80	79 / 31	105 / 105	100 / 40	134 / 134	124 / 49	166 / 166	151 / 60	198 / 201	174 / 71	200 / 217	174 / 84	200 / 217	174 / 98	200 / 217	174 / 112	200 / 217
42'		34 / 34		51 / 51		70 / 70		91 / 91	87 / 35	116 / 116	108 / 43	144 / 144	131 / 52	175 / 175	157 / 62	190 / 207	166 / 73	190 / 207	166 / 85	190 / 207	166 / 98	190 / 207
44'		29 / 29		44 / 44		61 / 61		80 / 80	76 / 30	102 / 102	95 / 38	126 / 126	115 / 46	154 / 154	138 / 55	177 / 184	158 / 64	182 / 198	158 / 75	182 / 198	158 / 86	182 / 198
46'				39 / 39		53 / 53		70 / 70		90 / 90	83 / 33	111 / 111	101 / 40	135 / 135	121 / 48	162 / 162	143 / 57	174 / 189	151 / 66	174 / 189	151 / 76	174 / 189
48'				34 / 34		47 / 47		62 / 62		79 / 79	74 / 29	99 / 99	90 / 36	120 / 120	108 / 43	144 / 144	127 / 50	161 / 169	145 / 59	167 / 181	145 / 68	167 / 181
50'				30 / 30		42 / 42		55 / 55		70 / 70		88 / 88	80 / 32	107 / 107	96 / 38	128 / 128	113 / 45	148 / 151	132 / 52	159 / 173	139 / 60	160 / 174

Table Footnotes

* Indicates total load (TL) value controls.

• Red numbers refer to 115% total load (TL).

See Load Table Instructions and General Notes on page 6.

8' ON-CENTER ROOF SPAN TABLE

Red-I90HS™ Joist, 8' On-Center Roof Span

Red-I90HS™ Joist Depth	12 PSF Dead Load	14 PSF Dead Load	16 PSF Dead Load
16"	27'- 0"	26'- 0"	24'- 6"
18"	29'- 10"	28'- 6"	26'- 8"
20"	32'- 4"	30'- 1"	28'- 1"
22"	***35'- 4"***	***33- 7"***	***31'- 4"***
24"	***38'- 0"***	***35'- 8"***	***33'- 3"***
26"	***40'- 2"***	***37'- 9"***	***35'- 1"***
28"	***42'- 0"***	***39'- 9"***	***36'- 11"***
30"	***43'- 8"***	***41'- 9"***	***38'- 8"***
32"	***45'- 4"***	***41'- 9"***	***38'- 8"***

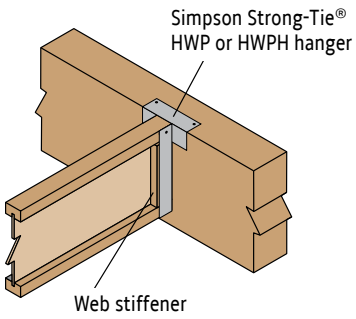

Table is based on:

- Uniformly loaded, simple-span joists
- Red-I90HS™ joists spaced at 8' on-center
- Spans limited by total load deflection of L/180
- Spans reflect 125% duration of load adjustment
- Roof live load of 20 psf with live load reductions applied per 2021 IBC Section 1607.14.2
- Roof slopes of ¼" per foot
- DF/SP (or equivalent) support for hanger.

General Notes

- Span is defined as horizontal clear distance between inside face of beam/wall supports.
- Reaction based on hanger bearing length and web stiffeners. See web stiffener information on page 16.
- ***Bold italic*** numbers indicate HWPH hanger required.
- Fill all nail holes in hanger. Use 0.148" x 1½" nails into joists and 0.162" x 3½" nails into header.

Typical Floor System

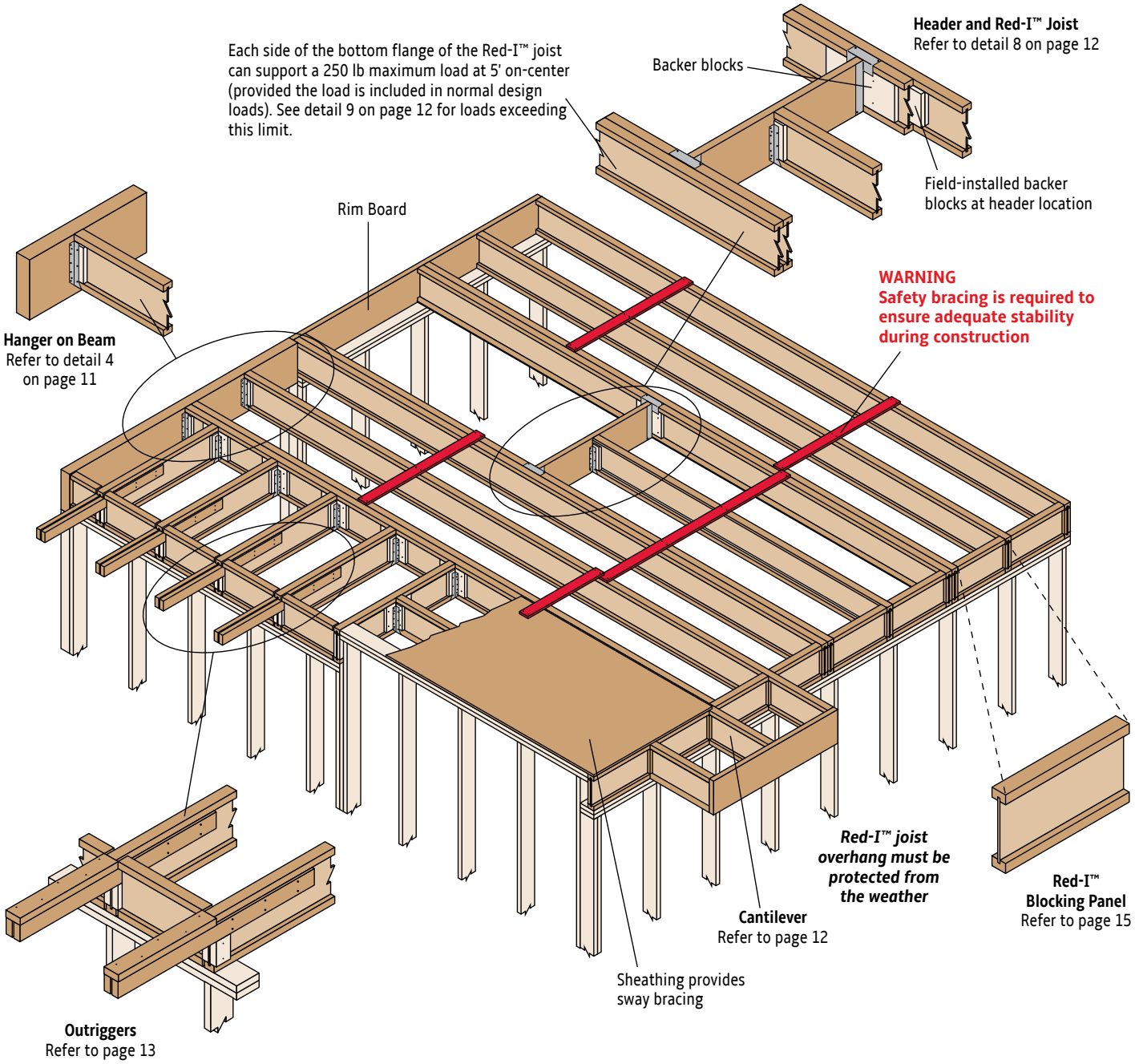

General Notes

- Details shown on pages 10–14 are conceptual. Attachments and connections shall be made to the supporting structure in accordance with the specific design requirements.
- Rim board or Red-I™ blocking panels (or an equivalent alternative) must always be used to prevent rollover and to provide structural attachment of the deck sheathing to the supporting structure in accordance with the specific design requirements.

See Red-I™ Joist Installation Information (available online at redbuilt.com) for additional installation guidelines.

1 Nailing Red-I™ Joist to Bearing Plate

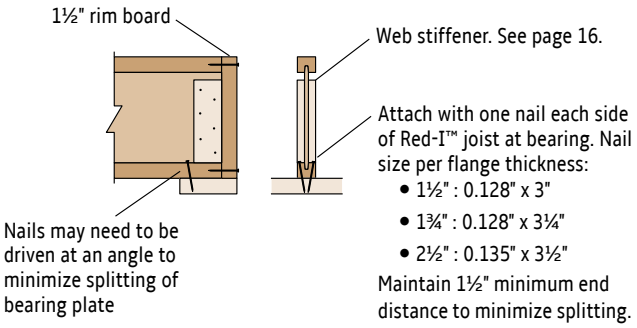

2 Hanger on Stud Wall

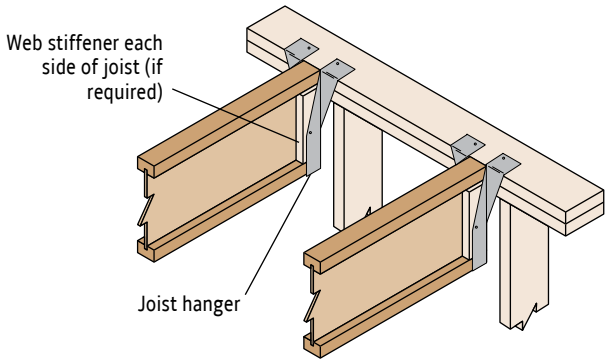

The potential for top plate rotation may reduce hanger capacities. Contact RedBuilt for assistance.

3 Hanger on Ledger

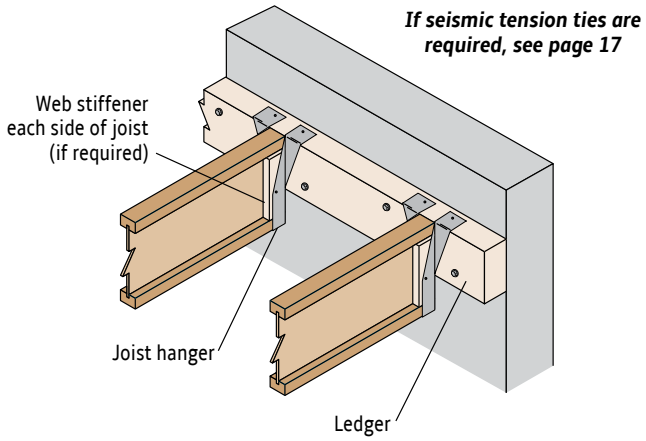

4 Hanger on Beam

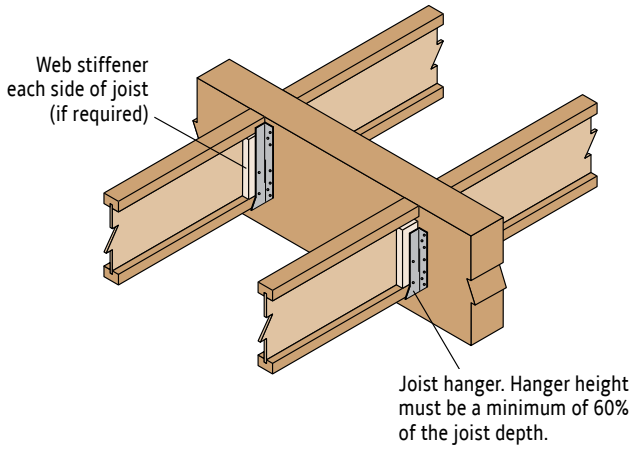

Web stiffeners are required if the sides of the hanger do not laterally support at least ⅜" of the Red-I™ joist top flange.

5 Hanger on Steel Beam

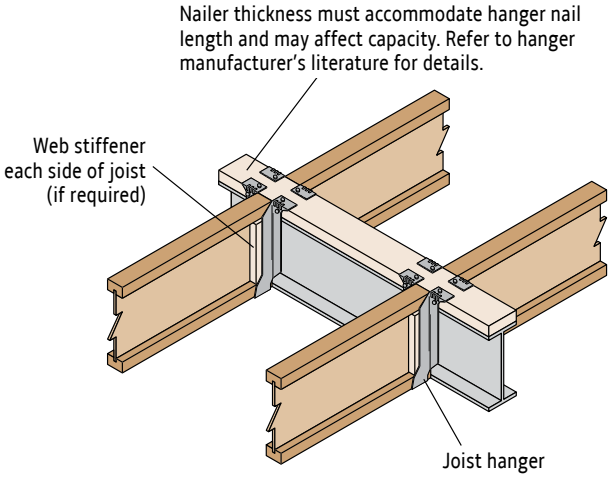

6 Hanger on Masonry Wall

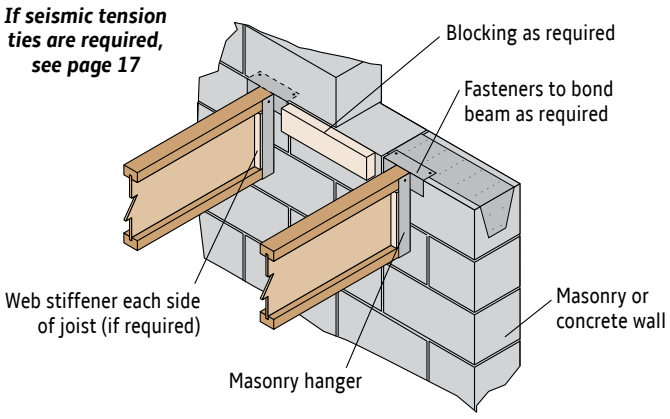

Traditional masonry hangers will not support construction loads without a minimum amount of cured masonry construction above hanger level. Refer to hanger manufacturer's literature for information on the correct installation and use of masonry hangers.

FLOOR DETAILS

7 Side-Loaded Double Joist
(Ladder Framing)

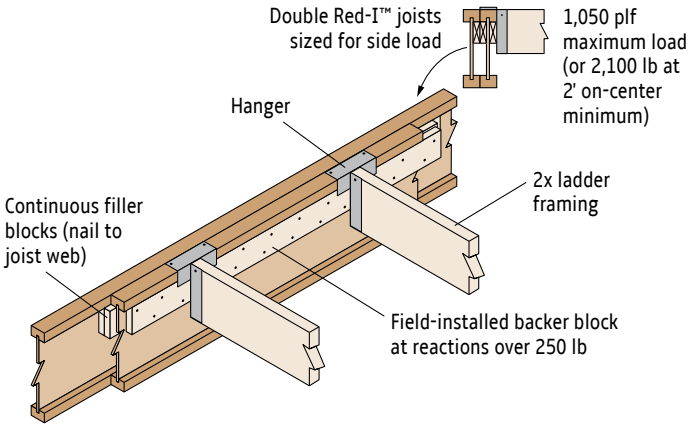

8 Side-Loaded Double Joist
(Header Location)

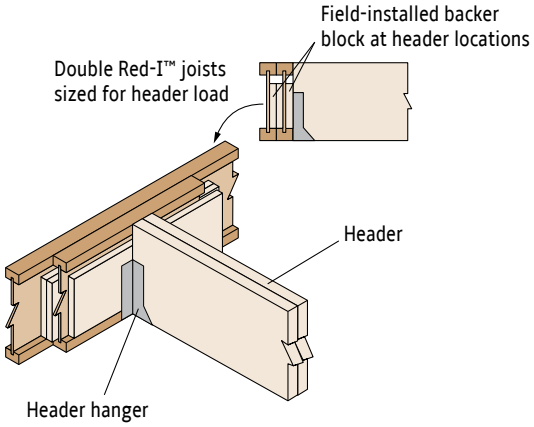

9 Support Detail
(For Loads Exceeding 250 lb)

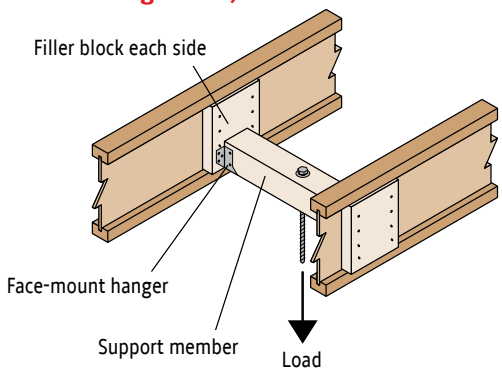

Each side of the bottom flange of the Red-I™ joist can support a 250 lb maximum load at 5' on-center (provided the load is included in normal design loads). Use detail 9 above for loads exceeding this limit.

For additional information on supporting hanging loads and sprinkler systems, see the RedBuilt Sprinkler System Installation Guide (available online at redbuilt.com).

10 Top-Loaded Double Joist

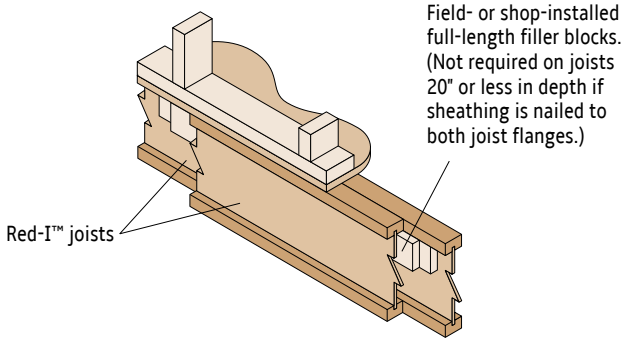

CANTILEVERS AND OUTRIGGERS

11 Red-I™ Joist Cantilever

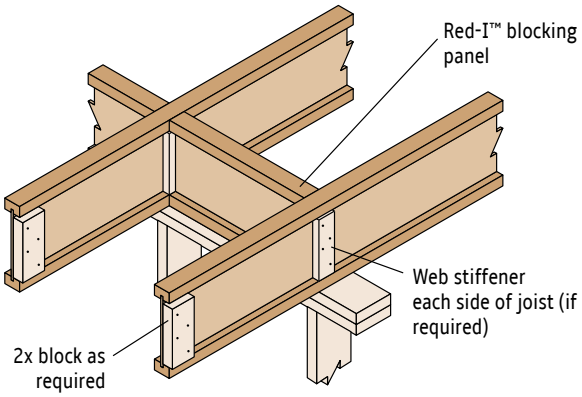

Red-I™ joists are intended for dry-use applications.

12a Cantilevers (Field-Assembled Only)

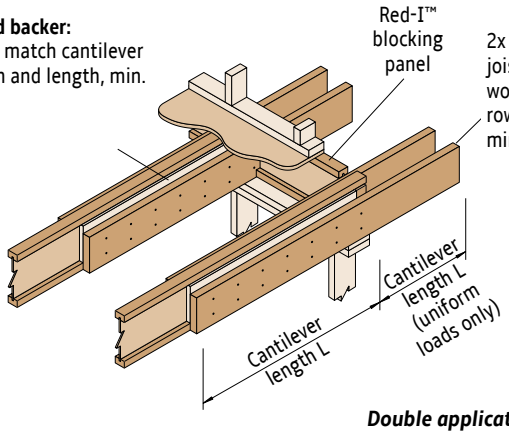

Red-I™ joists and cantilevers/outriggers are intended for dry-use applications.

12b Outriggers (Available as Plant-Assembled)

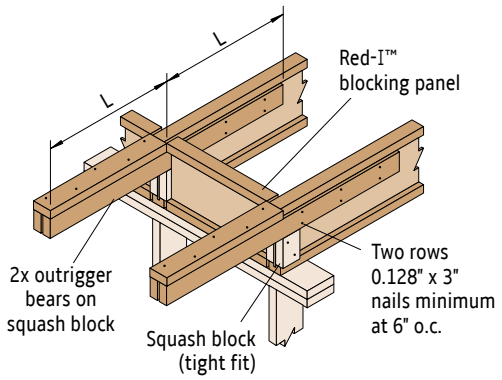

Double application shown in detail 12. Single application is similar. See General Notes below regarding allowable loads.

Double 2x Cantilever/Outrigger — Allowable Uniform Loads (PLF)

Cantilever/ Outrigger Length L	Solid Sawn Lumber														
	Two 2x4			Two 2x6			Two 2x8			Two 2x10			Two 2x12		
	Floor	Snow Roof	Non-Snow Roof	Floor	Snow Roof	Non-Snow Roof	Floor	Snow Roof	Non-Snow Roof	Floor	Snow Roof	Non-Snow Roof	Floor	Snow Roof	Non-Snow Roof
24"	342	393	427	393	451	491	393	451	491	393	451	491	393	451	491
30"	219	251	273	384	441	***480***	384	441	***480***	384	441	***480***	384	441	***480***
36"	152	174	189	323	371	***403***	***378***	***435***	***473***	***378***	***435***	***473***	***378***	***435***	***473***
42"	111	128	139	237	272	295	***374***	***430***	***467***	***374***	***430***	***467***	***374***	***430***	***467***
48"	77	97	106	181	208	225	289	***330***	***358***	***371***	***426***	***463***	***371***	***426***	***463***
54"	54	77	83	143	163	177	227	260	***281***	***337***	***384***	***414***	***368***	***424***	***460***
60"		62	63	115	132	143	183	209	227	***271***	***308***	***332***	***362***	***410***	***441***
66"			47	95	109	118	151	172	186	***222***	***252***	***271***	***296***	***335***	***359***
72"				79	91	99	126	144	156	186	***210***	***226***	***246***	***277***	***295***
78"				68	77	84	107	122	132	157	178	***190***	***207***	***232***	***246***
84"				56	66	72	92	105	113	135	152	162	***177***	***197***	***208***
90"					57	62	80	91	97	116	131	139	153	***169***	***178***
96"					50	54	70	79	85	102	114	121	133	146	***153***

Cantilever/ Outrigger Length L	RedLam™ LVL														
	Two 1½" x 3½"			Two 1½" x 5½"			Two 1½" x 7¼"			Two 1½" x 9¼"			Two 1½" x 11¼"		
	Floor	Snow Roof	Non-Snow Roof	Floor	Snow Roof	Non-Snow Roof	Floor	Snow Roof	Non-Snow Roof	Floor	Snow Roof	Non-Snow Roof	Floor	Snow Roof	Non-Snow Roof
24"	393	451	491	393	451	491	393	451	491	393	451	491	393	451	491
30"	292	441	***467***	384	441	***480***	384	441	***480***	384	441	***480***	384	441	***480***
36"	173	277	277	***378***	***435***	***473***	***378***	***435***	***473***	***378***	***435***	***473***	***378***	***435***	***473***
42"	110	177	177	***374***	***430***	***467***	***374***	***430***	***467***	***374***	***430***	***467***	***374***	***430***	***467***
48"	74	119	119	***277***	***419***	***444***	***371***	***426***	***463***	***371***	***426***	***463***	***371***	***426***	***463***
54"	53	84	84	***198***	***317***	***317***	***368***	***424***	***460***	***368***	***424***	***460***	***368***	***424***	***460***
60"		62	62	146	***233***	***233***	***322***	***421***	***458***	***366***	***421***	***458***	***366***	***421***	***458***
66"		46	46	110	***177***	***177***	***246***	***355***	***381***	***365***	***419***	***456***	***365***	***419***	***456***
72"		36	36	85	137	137	***191***	***295***	***306***	***363***	***418***	***453***	***363***	***418***	***454***
78"				67	108	108	***152***	***243***	***243***	***306***	***360***	***375***	***362***	***417***	***453***
84"				54	87	87	***122***	***196***	***196***	***247***	***302***	***314***	***361***	***378***	***386***
90"					71	71	100	***160***	***160***	***203***	***256***	***265***	***305***	***318***	***324***
96"					58	58	83	***132***	***132***	***168***	***219***	***225***	***260***	***270***	***274***

Table is based on:

Solid Sawn [1]

F_v = 175 psi
F_b = 900 psi[2]
E = 1.6 x 10^6 psi

RedLam™ LVL

F_v = 285 psi
F_b = 2140 psi[3]
E = 1.6 x 10^6 psi

Cantilever/Outrigger Deflection

- 2L/480 at floor live load (live load = 0.80 x total load)
- 2L/240 at roof total load

[1] Lesser of Douglas Fir-Larch #2 or Southern Pine #1.
[2] Size Factor, C_F, per 2018 NDS® Supplement Table 4A is applied.
[3] For 12" depth; for other depths, multiply by $(12/d)^{0.136}$

General Notes

- ***Bold Italic*** cells indicate a single 2x can be used; at half the table load. For all other cells single 2x members are not permitted.
- Members have been evaluated for 300 lb point load.

13 Slope Detail

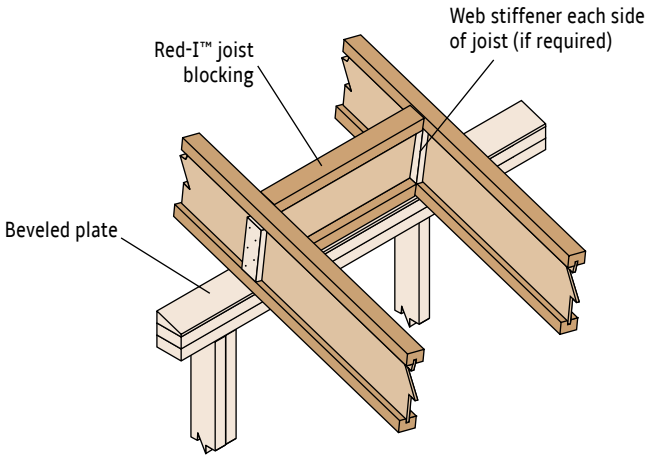

14 Slope Detail at High End

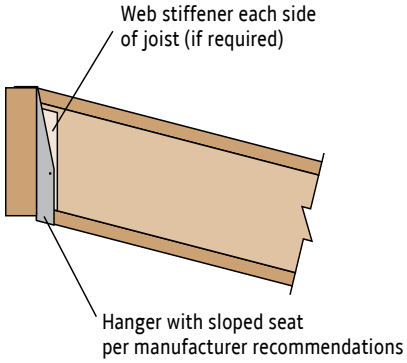

15 Beveled Plate Requirements

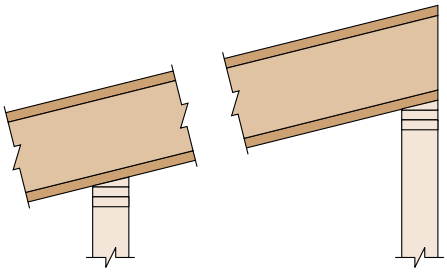

Required Bearing Length	Maximum Slope Without Beveled Plate
1¾"	½" in 12"
3½"	¼" in 12"
5½"	1⁄8" in 12"

16 Ridge Detail

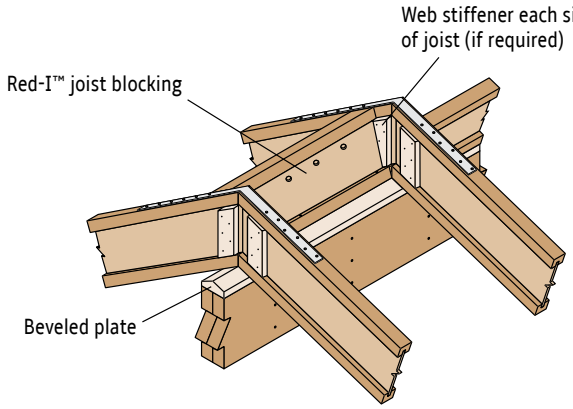

A strap and alternating blocking panels, or two rows of blocking panels, are required for lateral stability.

17 Cantilever with Mansard Framing

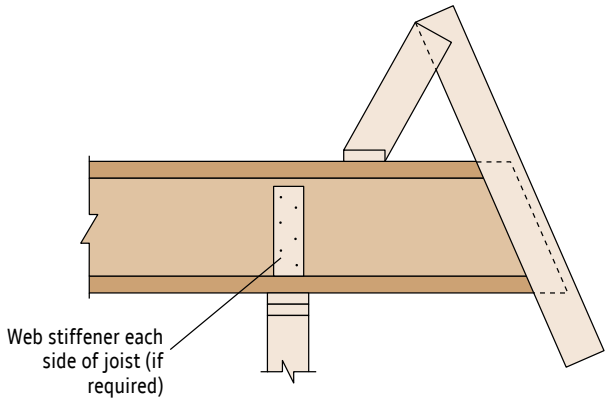

18 Bevel Cut or Fire Cut

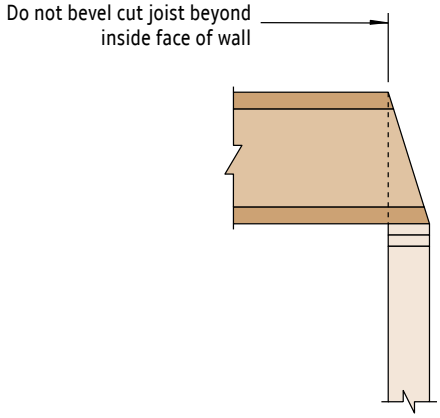

RIM BOARD

Rim board (up to 24" in depth) is available from RedBuilt and may be used for:

- Shear transfer (nailing must be established by design).
- Vertical load transfer.
- General closure.
- Helping to prevent rollover during joist installation.

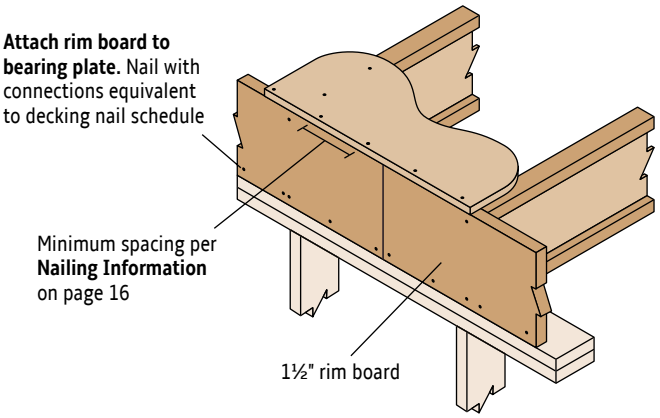

RED-I™ BLOCKING PANELS

Red-I™ blocking panels are available from RedBuilt and may be used for:

- Vertical load transfer.
- General closure.
- Helping to prevent rollover during joist installation.
- Shear transfer (nailing must be established by design).

  Maximum shear transfer capacity for each joist is:
  1,785 plf for Red-I45™ joists;
  2,255 plf for Red-I65™ and Red-I90™ joists;
  2,300 plf for Red-I90H™ joists;
  2,320 plf for Red-I90HS™ joists.
  May be increased for duration of load.

When Red-I™ blocking panels are used for vertical load transfer, values shown in the following table may be used:

Allowable Uniform Vertical Load Transfer (PLF)

Red-I™ Joist Series	Red-I™ Blocking Panel Depth				
I45	9½"	11⅞"–14"	16"	–	–
	2,100	2,100	2,100	–	–
I65, I90, I90H and I90HS	9½"	11⅞"–14"	16"–20"	22"–24"	26"–30"
	–	3,050	2,450	1,850	1,200

- Loads are for Red-I™ blocking panels or Red-I™ joists as rim board.
- Loads shown may not be increased for duration of load.

Concentrated Vertical Loads

The allowable concentrated vertical loads on Red-I™ blocking panels or rim joist can be determined by using the equation provided below. Loads exceeding the calculated value should be supported by squash blocks.

$$P_{allow} = W_{allow} \left[\frac{L_c + 2t_s + 2t_f}{12}\right]$$

Where:

P_{allow} = Allowable concentrated vertical load, lb

W_{allow} = Allowable uniform vertical load for transfer, plf

L_c = Bearing length of column base, in

t_s = Thickness of material between column base and blocking panel, such as sole plate or sheathing, in

t_f = Effective flange thickness:
⅞" for Red-I45™, Red-I65™ and Red-I90™ joists;
1⅛" for Red-I90H™ joists;

Example Calculation

4x4 post applied to 20" Red-I65™ joist through $^{23}/_{32}$" sheathing.

$$P_{allow} = 2{,}450 \left[\frac{3.5 + 2(^{23}/_{32}) + 2(^{7}/_{8})}{12}\right] = 1{,}365 \text{ lb}$$

Minimum Red-I™ blocking panel attachment: Use 0.128" x 3" nails (0.135" x 3½" with I90HS joists) at 6" on-center. When used for shear transfer, nail to bearing plate with connections equivalent to decking nail schedule.

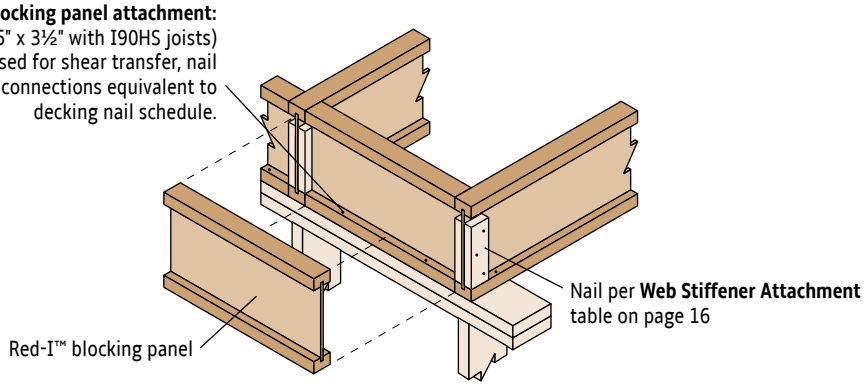

WEB STIFFENERS

The Importance of Web Stiffeners

Web stiffeners are available from RedBuilt in pre-cut sizes and can be installed at the plant on one or both ends upon request. Web stiffeners are an important part of almost all Red-I™ joist installations because they will:

- Stiffen the Red-I™ joist web for increased reaction capacity.
- Minimize the bearing length required for the Red-I™ joist.
- Help transfer reaction loads into the Red-I™ joist web.
- Provide stabilization in hangers.

Proper Installation Ensures System Performance

- Web stiffeners must be installed at bearing points as shown in the details below and at points of concentrated loads exceeding 1,500 lb.
- Web stiffeners are required on joists 20" and greater in depth.
- Web stiffeners are available from RedBuilt and typically have the maximum gap shown below. Verify that hanger nails adequately engage the web stiffener.
- Gap must be at top for all bearing conditions. For concentrated loads, the gap must be at the bottom (see details below).

Web Stiffener Attachment — Nail Quantities

Joist Depth	Red-I45™	Red-I45™	Red-I65™	Red-I90™ and Red-I90H™		Red-I90HS™
	16g Staple x 1½" with 7/16" crown	8d (0.113" x 2½") Nails (1)		16d (0.135" x 3½") Nails (2)		
	End or Intermediate	End or Intermediate	End or Intermediate	End	Intermediate	End or Intermediate
9½"	4	3	–	–	–	–
11⅞"	4	3	3	3	3	5
14"	7	3	5	4	4	7
16"	8	3	6	5	5	7
18"	–	–	7	5	5	9
20"	–	–	8	6	6	11
22"	–	–	9	7	12	11
24"	–	–	10	7	14	13
26"	–	–	11	8	15	15
28"	–	–	12	9	16	15
30"	–	–	13	9	18	17
32"	–	–	–	–	–	19

(1) 0.113 x 2 ¼" smooth or deformed-shank nails are acceptable.

(2) 0.131 x 3 ¼" smooth or deformed-shank nails are acceptable.

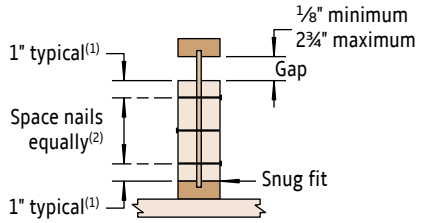

(1) 1 ½" (typical) with 2x4 solid sawn lumber web stiffeners.

(2) Nails may be driven from one side only.

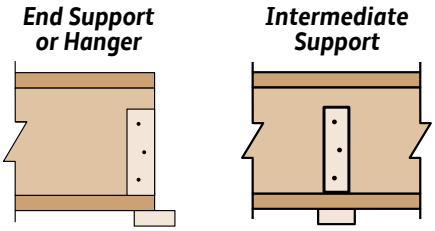

Web Stiffener Size and Material

Flange Width	Minimum Web Stiffener Size	Web Stiffener Material
1¾"	5/8" x 2 5/16"	Sheathing (with face grain vertical) that meets the requirements of PS1 or PS2
2½"	1" x 2 5/16"	Sheathing (with face grain vertical) that meets the requirements of PS1 or PS2
3½"	2x4	Construction grade or better (LVL or LSL required for Red-I90HS™)

Concentrated Load (No Bearing Wall Below)

If concentrated loads from above exceed 1,500 lb, install web stiffeners tight to Red-I™ joist top flange. See tables at left for nailing and material requirements.

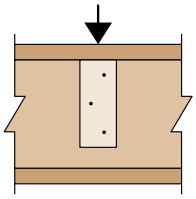

NAILING INFORMATION

Minimum Nail Spacing

Nail Type		Nail Size	RedLam™ LVL			Sawn Lumber	
			Face	Edge		Face	Edge
				Joist Flange	Rim Board, Header, Beam		
8d(1)	Box	0.113" x 2½"	2"	4"	3"	4"	2"
	Common	0.131" x 2½"	2"	6"	3"	6"	2"
10d	Box	0.128" x 3"	2"	6"	3"	6"	2"
	Common	0.148" x 3"	3"	6"	4"	6"	2½"
12d	Box	0.128" x 3¼"	2"	6"	3"	6"	2"
	Common	0.148" x 3¼"	3"	6"	4"	6"	2½"
16d	Box	0.135" x 3½"	3"	6"	4"	6"	2½"
	Sinker	0.148" x 3¼"	3"	6"	4"	6"	2½"
	Common	0.162" x 3½"	4"	8"	8"	8"	4"

(1) 14 gauge staples may be a direct substitute for 8d nails if a minimum penetration of 1" into the flange is maintained.

- If more than one row of nails is used, offset rows at least ½" and stagger. Use 0.148" x 3" nails, maximum, and maintain ⅜" minimum edge distance. **Exception: Wind/Seismic Connections** (see page 17).
- Nailing pattern to be per plans and specifications, and nail spacing should comply with criteria listed on this page.
- For member stability, nail sheathing to the full length of the member (24" on-center, maximum).
- Lag screw allowed only in face of Red-I™ joist flange. Prebored lead hole required. Red-I45™: up to ¼" diameter. Red-I65™, Red-I90™, Red-I90H™, Red-I90HS™: up to ⅜" diameter. No lag screw allowed in edge of flange.

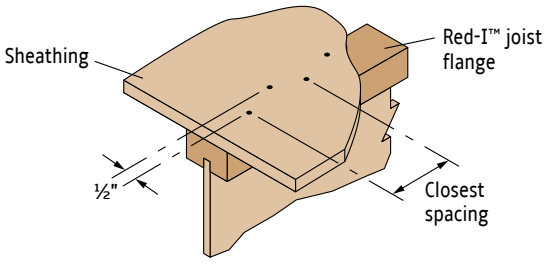

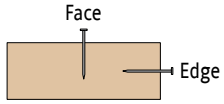

Flatwise orientation

(typical with Red-I™ joists and plywood edge blocking)

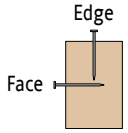

Edgewise orientation

(typical with rim board, beams, and headers)

Strap Tension Tie Nailing and Capacities—Allowable Tension Loads*

Design Category	Maximum Ledger Size	Model No.	Strap Length	Embed. Length, l_e		Uncracked Concrete			Cracked Concrete			GFCMU Wall			Max. Allowable Strap Tension (lb)
				Concrete	CMU	Nail Qty.	Nail Size	Tension (lb)	Nail Qty.	Nail Size	Tension (lb)	Nail Qty.	Nail Size	Tension (lb)	
Wind and SDC A–B	4x	PAI18	18"	4"	6"	10	0.148 x 1½"	2,025	10	0.148 x 1½"	2,025	9	0.148 x 1½"	1,055	N/A
		PAI23	23"	4"	6"	15	0.148 x 1½"	3,035	12	0.148 x 1½"	2,260	14	0.148 x 1½"	1,805	N/A
		PAI28	29"	4"	6"	16	0.148 x 1½"	3,230	12	0.148 x 1½"	2,260	16	0.148 x 1½"	2,705	N/A
		PAI35	35"	4"	6"	16	0.148 x 1½"	3,230	12	0.148 x 1½"	2,260	18	0.148 x 1½"	2,815	N/A
		MPAI32	33½"	5½"	5½"	16	0.148 x 1½"	2,885	16	0.148 x 1½"	2,885	16	0.148 x 1½"	2,355	N/A
		MPAI44	45½"	5½"	5½"	16	0.148 x 1½"	2,885	16	0.148 x 1½"	2,885	24	0.148 x 1½"	2,865	N/A
SDC C–F	4x	PAI18	18"	4"	6"	10	0.148 x 1½"	2,025	10	0.148 x 1½"	1,980	9	0.148 x 1½"	1,055	4,180
		PAI23	23"	4"	6"	14	0.148 x 1½"	2,830	10	0.148 x 1½"	1,980	14	0.148 x 1½"	1,805	4,180
		PAI28	29"	4"	6"	14	0.148 x 1½"	2,830	10	0.148 x 1½"	1,980	16	0.148 x 1½"	2,705	5,070
		PAI35	35"	4"	6"	14	0.148 x 1½"	2,830	10	0.148 x 1½"	1,980	18	0.148 x 1½"	2,815	5,070
		MPAI32	33½"	5½"	5½"	16	0.148 x 1½"	2,885	16	0.148 x 1½"	2,885	16	0.148 x 1½"	2,355	3,205
		MPAI44	45½"	5½"	5½"	16	0.148 x 1½"	2,885	16	0.148 x 1½"	2,885	24	0.148 x 1½"	2,865	3,205

- Allowable loads have been increased for earthquake or wind load durations with no further increases allowed.
- Deflection at highest allowable loads for standard installation are as follows: PAI18 = 0.10", PAI23 = 0.158", PAI28 = 0.167", PAI35 = 0.141", and MPAI = 0.062".
- To obtain LRFD values, multiply ASD seismic load values by 1.43 and ASD wind load values by 1.67.
- Minimum center-to-center spacing is 3x the required embedment. Standard installation is based on minimum 1.5 x l_e end distance.
- For wall anchorage systems in SDC C–F, the maximum allowable strap tensile capacity shall not be less than 1.4 times the ASD anchor design load.
- Nail quantities are based on Douglas fir (DF) or equivalent specific gravity of 0.50 or better. For use on spruce-pine-fir (SPF) or hem fir (HF), nail quantities shall be increased by 1.15 to achieve allowable loads.
- Structural composite lumber beams have sides that show either the wide face or the lumber strands/veneers. Values in tables reflect installation in the wide face.
- Concrete shall have a minimum concrete strength (f'_c) of 3,000 psi. Minimum f'_m is 1,500 psi for masonry.
- Use 0.148" x 1½" nails when installing directly to joists. When installing over wood structural panel sheathing, use 2⅛" minimum nail lengths.
- MPAI straps require 3½" flanges, PAI straps require minimum 2½" flanges.
- See hanger manufacturer for installation information.

* Information adapted from Simpson Strong-Tie® catalog Wood Construction Connectors 2021-2023, C-C-2021, p. 63 and ICC-ES ESR-2920.

19 Wall Tension Tie With Straps

For 2½" or wider Red-I™ joists.

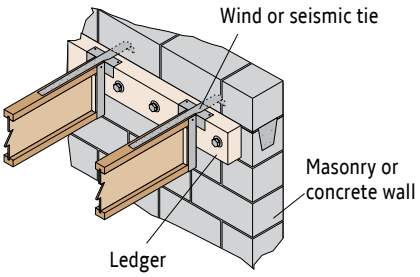

20 Wind or Seismic Tie at Butting Joists

Tension straps must have a minimum nail spacing of 3" on-center per row, with a minimum of ⅜" between rows and maximum nail diameter of 0.148" (10d common).

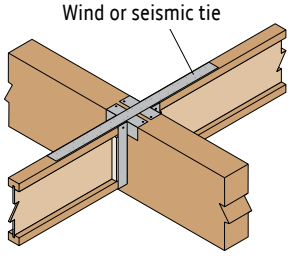

See strap manufacturer's literature for allowable loads.

21 Wall Tension Tie — HD Connections

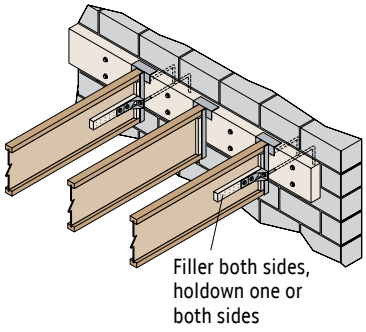

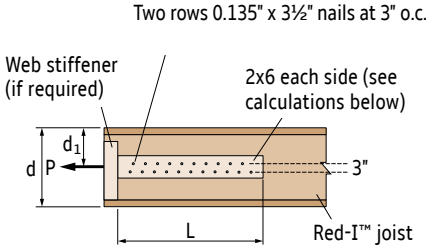

To calculate the length of the filler block (to transfer shear to joist flange):

1. Find

$$L_1 = \left[\frac{0.75\,(KP)d_1}{C_D V_r - [V_{DL} + (0.75V_{LL})]}\right]$$

2. Find

$$L_2 = \tfrac{3}{2}\,(n) + 3, \text{ where } n = \frac{KP}{V_n C_D}$$

3. Compare L_1 and L_2. Use maximum of the two values for the length of the the filler block.

C_D = Load duration factor
d_1 = Distance from top of joist to axial load, inches
L_1, L_2 = Length of filler block, inches
K = ASD conversion factor for axial load: 0.6 for LRFD wind, 0.7 for LRFD seismic, 1.0 for ASD
n = Number of nails
P = Axial load (LRFD or ASD), lb
V_r = Resistive shear of joist (see page 5), lb
V_{DL} = Shear due to gravity dead load (ASD), lb
V_{LL} = Shear due to gravity live load (ASD), lb
V_n = Nail shear capacity (see table below), lb

Nail Shear Capacity

Red-I™ Series	V_n (lb)
Red-I45™	107
Red-I65™, Red-I90™, Red-I90H™	124
Red-I90HS™	142

FIRE ASSEMBLIES

For Fire Assemblies and other construction-related fire information, please refer to ICC-ES Report ESR-2994, PFS Fire-Rated Assemblies, Intertek Fire-Rated Assemblies, Fire Facts Guide, and AutoCAD details at redbuilt.com.

SOUND ASSEMBLIES

The ability of a wall or floor/ceiling system to reduce airborne sound transmission is measured using ASTM E90, and reported using the ASTM E413 Sound Transmission Class (STC) rating system. The ratings listed below—originally developed by the Acoustical and Insulation Materials Association and now considered a standard throughout the industry—are a practical reference for a range of STC numbers. In general, the higher the number, the better the acoustical performance. It is important to note that this table is valid only for a given level of background noise and should be used only for generalized comparisons.

Floor/ceiling systems can also be rated for impact noise transmitted through an assembly. Ratings are determined using the ASTM E492 Impact Insulation Class (IIC) system, and like STC ratings, a high IIC rating indicates significantly reduced impact noise.

STC Ratings

25	Normal speech can be understood quite clearly
30	Loud speech can be understood fairly well
35	Loud speech audible but not intelligible
42	Loud speech audible as a murmur
45	Must strain to hear loud speech
48	Some loud speech barely audible
50	Loud speech not audible

Testing

The acoustical assemblies provided below have been tested and rated by recognized acoustical laboratories, and the ratings shown are well within the acceptable range for multi-family buildings. However, in order to achieve these ratings, precautions should be taken to prevent flanking noise and sound leaks, and to ensure that actual construction conforms to the assembly shown.

22 ICC-ES ESR-2994 Assembly D

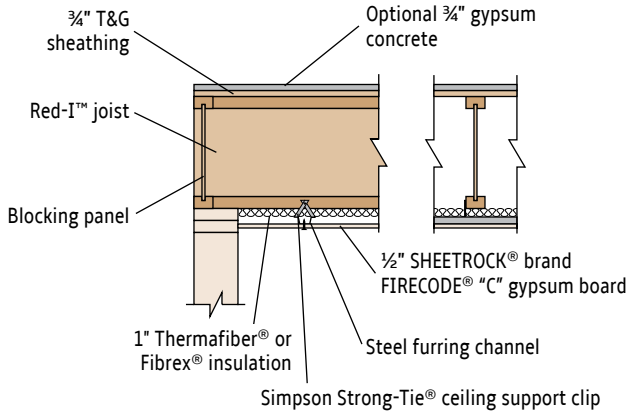

Without Gypsum Concrete	With Gypsum Concrete
STC = 47	STC = 59
Pad and carpet IIC = 54	Pad and carpet IIC = 54
Cushioned vinyl IIC = 43	Cushioned vinyl IIC = 43

23 ICC-ES ESR-2994 Assembly B

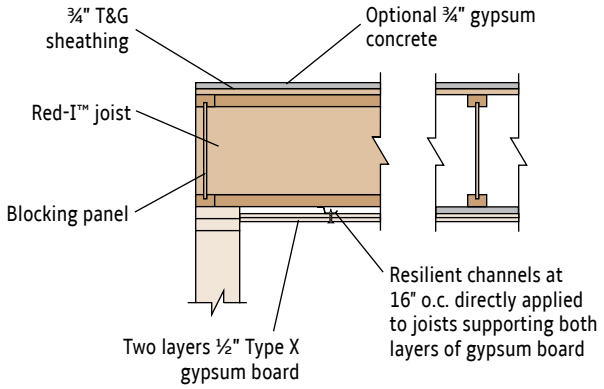

Without Gypsum Concrete	With Gypsum Concrete
STC = 50	STC = 58
Pad and carpet IIC = 60	Pad and carpet IIC = 54
Cushioned vinyl IIC = 45	Armstrong Vios/Armstrong Cambray sheet vinyl LLC = 50(1)
Tarkett Acoustiflor® IIC = 51(1)	Tarkett Acoustiflor® IIC = 54(1)

(1) Requires two layers of ⅝" Type X gypsum board with one layer of 3½" thick batt insulation.

24

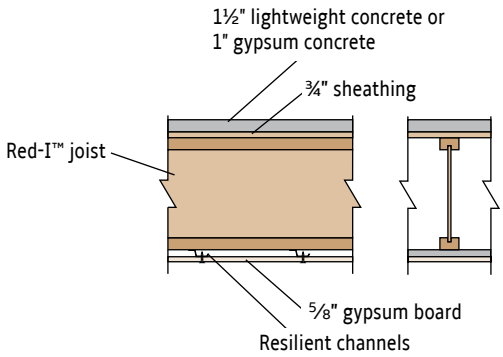

Laboratory Test
STC = 57
G&H No. USDA-11xST

25

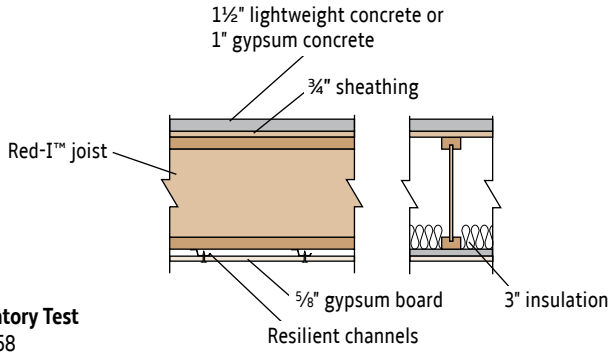

Laboratory Test
STC = 58
With pad and carpet IIC = 77
With vinyl tile IIC = 50
G&H No. USDA-11xST

RED-I JOIST™ ALLOWABLE HOLES

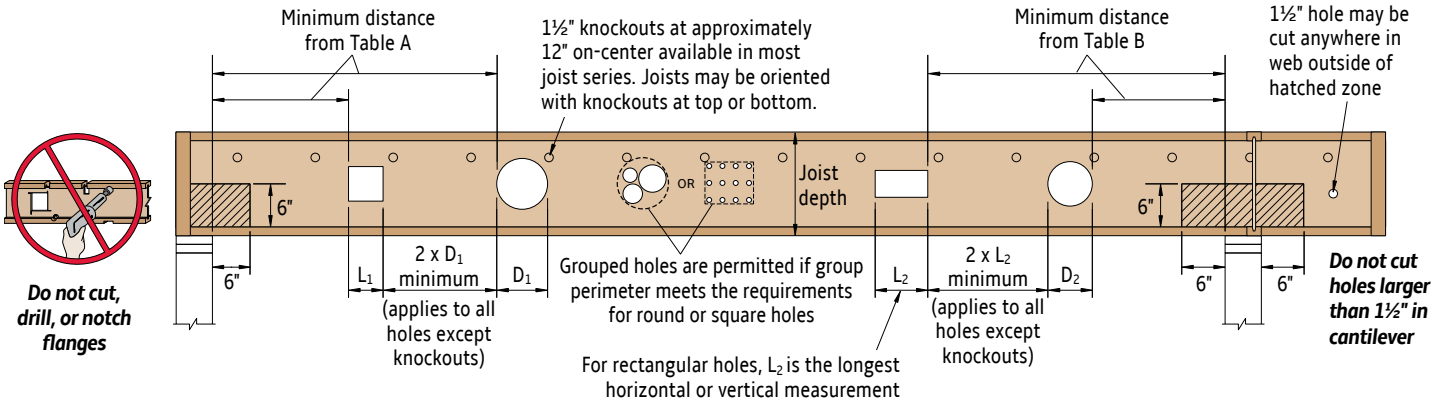

TABLE A: End Support or Simple Span

Minimum distance from edge of hole to inside face of nearest support

TABLE B: Intermediate or Cantilever Support

Minimum distance from edge of hole to inside face of nearest intermediate or cantilever support

Joist Depth	Joist Series	Round Hole Size: 2"	4"	6"	8"	10"	12"	14"	16"	18"	20"	Square or Rectangular Hole Size: 1.25"	2.5"	4"	5"	6"	7"	8.5"	9.5"	10.5"	13"
9½"	Red-I45	1'-0"	***2'-6"***	***4'-0"***	–	–	–	–	–	–	–	1'-0"	***2'-6"***	***5'-0"***	–	–	–	–	–	–	–
	Red-I65	1'-6"	***3'-0"***	***5'-0"***	–	–	–	–	–	–	–	1'-6"	***4'-0"***	***6'-6"***	–	–	–	–	–	–	–
	Red-I90	2'-0"	3'-6"	***5'-6"***	–	–	–	–	–	–	–	3'-0"	5'-6"	***8'-0"***	–	–	–	–	–	–	–
11⅞"	Red-I45	1'-0"	2'-0"	***3'-6"***	***5'-0"***	–	–	–	–	–	–	1'-0"	***2'-0"***	***4'-0"***	***6'-6"***	–	–	–	–	–	–
	Red-I65	1'-6"	3'-0"	***4'-6"***	***6'-6"***	–	–	–	–	–	–	1'-0"	3'-0"	***5'-6"***	***8'-6"***	–	–	–	–	–	–
	Red-I90 / Red-I90H	1'-6"	3'-6"	5'-6"	***7'-0"***	–	–	–	–	–	–	2'-0"	4'-6"	7'-6"	***10'-0"***	–	–	–	–	–	–
	Red-I90HS	2'-0"	4'-0"	6'-6"	–	–	–	–	–	–	–	3'-6"	6'-0"	9'-0"	–	–	–	–	–	–	–
14"	Red-I45	1'-0"	2'-0"	3'-0"	***4'-0"***	***6'-0"***	–	–	–	–	–	1'-0"	1'-0"	3'-0"	***5'-0"***	***7'-6"***	–	–	–	–	–
	Red-I65	1'-0"	2'-6"	4'-0"	***5'-6"***	***8'-0"***	–	–	–	–	–	1'-0"	1'-6"	4'-0"	***7'-0"***	***10'-6"***	–	–	–	–	–
	Red-I90 / Red-I90H	1'-0"	3'-0"	5'-0"	6'-6"	***9'-0"***	–	–	–	–	–	1'-0"	3'-6"	6'-0"	9'-0"	***12'-6"***	–	–	–	–	–
	Red-I90HS	2'-0"	4'-0"	6'-0"	8'-0"	–	–	–	–	–	–	4'-0"	6'-6"	9'-0"	11'-6"	–	–	–	–	–	–
16"	Red-I45 / Red-I65	1'-0"	1'-6"	3'-0"	4'-0"	***5'-0"***	***8'-0"***	–	–	–	–	1'-0"	1'-0"	2'-0"	***4'-0"***	***6'-6"***	***10'-0"***	–	–	–	–
	Red-I90 / Red-I90H	1'-0"	2'-0"	4'-0"	6'-0"	8'-6"	***10'-6"***	–	–	–	–	1'-0"	1'-6"	4'-6"	8'-0"	11'-0"	***14'-6"***	–	–	–	–
	Red-I90HS	2'-0"	4'-0"	6'-0"	8'-0"	10'-0"	–	–	–	–	–	3'-0"	6'-0"	8'-6"	11'-6"	14'-0"	–	–	–	–	–
18"	Red-I45 / Red-I65	1'-0"	1'-0"	2'-6"	3'-6"	4'-6"	***6'-0"***	***9'-0"***	–	–	–	1'-0"	1'-0"	1'-0"	2'-6"	***5'-0"***	***8'-0"***	***12'-0"***	–	–	–
	Red-I90 / Red-I90H	1'-0"	1'-0"	2'-6"	5'-0"	7'-0"	9'-6"	***12'-6"***	–	–	–	1'-0"	1'-0"	2'-6"	5'-6"	9'-0"	12'-6"	***17'-0"***	–	–	–
	Red-I90HS	2'-0"	4'-0"	6'-0"	8'-0"	10'-0"	12'-0"	–	–	–	–	2'-6"	5'-6"	8'-0"	11'-0"	13'-6"	16'-6"	–	–	–	–
20"	Red-I45 / Red-I65	1'-0"	1'-0"	2'-0"	3'-0"	4'-0"	5'-0"	***7'-0"***	***10'-6"***	–	–	1'-0"	1'-0"	1'-0"	1'-0"	3'-6"	***6'-0"***	***9'-0"***	***13'-6"***	–	–
	Red-I90 / Red-I90H	1'-0"	1'-0"	2'-0"	4'-0"	6'-0"	8'-0"	11'-0"	***14'-0"***	–	–	1'-0"	1'-0"	1'-0"	3'-6"	7'-0"	10'-6"	14'-6"	***19'-6"***	–	–
	Red-I90HS	2'-0"	4'-0"	6'-0"	8'-0"	9'-6"	11'-6"	14'-0"	–	–	–	2'-0"	5'-0"	7'-6"	10'-6"	13'-6"	16'-0"	19'-6"	–	–	–
22"	Red-I65	1'-0"	1'-0"	1'-6"	2'-6"	3'-6"	4'-6"	5'-6"	7'-6"	***11'-6"***	–	1'-0"	1'-0"	1'-0"	1'-0"	2'-0"	4'-6"	7'-0"	10'-0"	***15'-0"***	–
	Red-I90 / Red-I90H	1'-0"	1'-0"	1'-0"	3'-0"	5'-0"	7'-0"	9'-0"	12'-6"	***16'-0"***	–	1'-0"	1'-0"	1'-6"	4'-0"	6'-6"	9'-6"	12'-0"	16'-0"	–	–
	Red-I90HS	2'-0"	4'-0"	6'-0"	8'-0"	9'-6"	11'-6"	13'-6"	16'-0"	–	–	1'-0"	3'-0"	6'-0"	9'-0"	12'-6"	15'-6"	18'-6"	22'-0"	–	–
24"–26"	Red-I65	1'-0"	1'-6"	2'-6"	3'-6"	4'-0"	5'-0"	6'-0"	7'-6"	***10'-0"***	–	1'-0"	1'-0"	1'-6"	3'-0"	4'-6"	6'-0"	7'-6"	10'-0"	***13'-6"***	–
	Red-I90 / Red-I90H	1'-0"	1'-0"	2'-0"	3'-6"	5'-0"	6'-6"	8'-6"	10'-6"	14'-6"	***18'-6"***	1'-6"	3'-0"	4'-6"	6'-0"	7'-6"	9'-0"	11'-0"	14'-0"	***18'-6"***	–
	Red-I90HS	2'-0"	4'-0"	6'-0"	7'-6"	9'-6"	11'-6"	13'-6"	15'-0"	18'-0"	–	1'-6"	4'-0"	6'-6"	9'-0"	11'-6"	14'-0"	17'-0"	20'-0"	23'-0"	–
28"–32"	Red-I65	1'-0"	2'-0"	2'-6"	3'-6"	4'-0"	5'-0"	6'-0"	7'-0"	8'-0"	10'-6"	1'-0"	1'-0"	1'-6"	3'-0"	4'-6"	6'-0"	7'-6"	9'-0"	11'-0"	***13'-6"***
	Red-I90 / Red-I90H	1'-0"	1'-6"	2'-6"	4'-0"	5'-6"	6'-6"	8'-0"	9'-6"	11'-6"	14'-6"	1'-6"	3'-0"	4'-6"	6'-0"	7'-6"	9'-0"	11'-0"	12'-6"	15'-6"	18'-6"
	Red-I90HS	2'-0"	3'-6"	5'-0"	7'-0"	8'-6"	10'-0"	12'-0"	13'-6"	16'-0"	18'-6"	1'-0"	2'-6"	4'-6"	7'-0"	9'-6"	12'-0"	14'-6"	17'-0"	19'-6"	21'-6"

General Notes

- Tables are based on maximum allowable uniform loads. ***Bold italic*** cells indicate 2000 lb. concentrated load spread over two joists has not been considered. Use RedSpec™ software or contact your RedBuilt technical representative if concentrated load check is required.
- Holes may be located vertically anywhere in the web. Leave ⅛" of web (minimum) at top and bottom of hole. **DO NOT cut joist flanges.**
- **Do not cut holes in cantilever without consulting your RedBuilt representative.**
- Knockouts are located in web at approximately 12" on-center; they do not affect hole placement.
- Interpolation between holes sizes shown in the tables is allowed.

How to Use Tables A and B

1. Determine the hole shape and size. For rectangular holes, use the largest dimension. Sizes shown in the tables are hole sizes, not duct sizes.
2. Determine the Red-I™ joist series and depth.
3. Determine the type of support on each side of the hole. If the Red-I™ joist is continuous over a support, use both tables.
4. Find the table cell at the intersection of the Red-I™ joist and the hole.
5. The measurement shown is the minimum distance from the edge of the hole to the inside face of the support.
6. Maintain the minimum required distance from **both** supports.

For other hole sizes, hole locations, or loads, use RedSpec™ software or contact your RedBuilt technical representative.

DEFLECTION CRITERIA

RedBuilt™ Recommended Deflection Criteria

Full-scale tests have shown repeatedly that RedBuilt™ products have deflection characteristics that are consistently predictable by calculation, with minimal set after load withdrawal.

The graph below shows that the RedBuilt recommended deflection limit for residential and commercial floors is more restrictive than the minimum of L/360 required by building codes. The floor load portions of the tables shown on pages 7–9 were developed based on the **Commercial Floor Deflection Limit** shown in the graph below.

Floors:

- Maximum deflection at live load limited as indicated below
- Movable partition loads need not be considered

Roofs:

- Sloped Roofs—¼" to 12" per foot, maximum deflection L/180 at total load
- Plaster Ceilings—Also check L/360 at live load

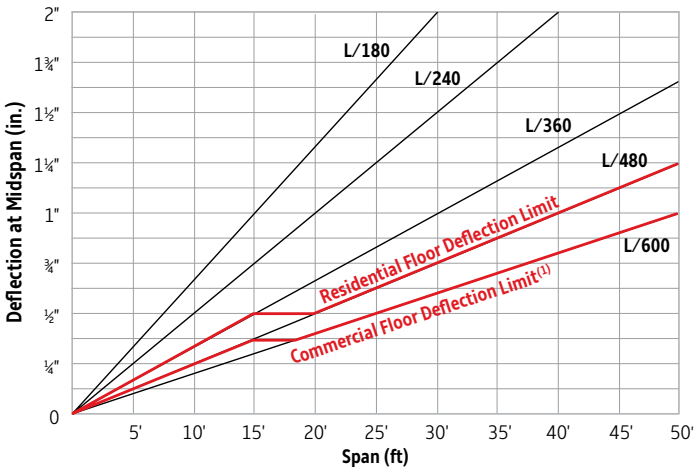

(1) For live load applications greater than 50 psf, check the L/600 deflection limit using a 50 psf live load, and check the code-prescribed deflection limit using the full live load.

Deflection criteria will vary by application. In a roof system, excessive deflection would be unsightly and could cause ceiling cracks and/or drainage problems. Floor systems, however, have entirely different—and usually much more restrictive—deflection requirements due to an occupant's perception of floor performance and feel.

The fundamental frequency of a floor system can be a good predictor of performance. Refer to the *FloorChoice™ Floor Performance* brochure on redbuilt.com for more information. Contact RedBuilt to discuss floor system performance for applications that are sensitive to vibration.

Deflection Calculations

The deflection characteristics of Red-I™ joists can be closely approximated by analyzing beams using the EI values for flexural deflections shown in the **Design Properties** table on page 5. The EI values selected from the **Design Properties** table must be determined by application (i.e., for roof applications use the EI for joists; for floor applications use the EI for nailed panels or glue-nailed panels).

For uniformly loaded simple spans, the mid-span deflection (in inches) can be calculated as shown below:

Joist Series	Mid-span Deflection Calculation*
Red-I45™	$\Delta = \frac{22.5wL^4}{EI} + \frac{2.67wL^2}{d \times 10^5}$
Red-I65™, Red-I90™, and Red-I90H™	$\Delta = \frac{22.5wL^4}{EI} + \frac{2.26wL^2}{d \times 10^5}$
Red-I90HS™	$\Delta = \frac{22.5wL^4}{EI} + \frac{2.00wL^2}{d \times 10^5}$

* The first term represents bending deflection.
The second term is shear deflection.

Where:

w = Uniform load, plf
L = Span, feet
d = Depth of Red-I™ joist, inches
EI = Value from the proper column in the **Design Properties** table (page 5), in^2-lb

Example Calculation

Condition:

- 14" Red-I65™ floor joist
- Nailed floor sheathing
- 20' span floor
- 100 plf uniform load

$$\Delta = \frac{22.5 \times 100 \times 20^4}{752 \times 10^6} + \frac{2.26 \times 100 \times 20^2}{14 \times 10^5} = 0.54"$$

In this same example, if the deck was glue-nailed to the Red-I™ joists the deflection would reduce to:

$$\Delta = \frac{22.5 \times 100 \times 20^4}{821 \times 10^6} + \frac{2.26 \times 100 \times 20^2}{14 \times 10^5} = 0.50"$$

SNOWDRIFT LOADING

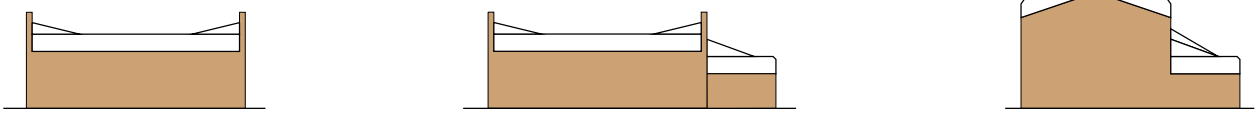

Wind direction, site exposure, and roof type and shape are some of the factors that can dramatically influence the accumulation of snow on a roof structure. ASCE 7 (*Minimum Design Loads and Associated Criteria for Buildings and Other Structures*) and the applicable building code, as well as other local state and regional codes, provide guidelines for calculating snowdrift loadings on all types of building construction.

Drifts usually occur at locations of discontinuity in a roof, such as at parapet walls, valleys, or where a high roof meets a low roof. Closer on-center spacing or additional support may be required at these locations.

The examples above illustrate potential snowdrift conditions. The project design professional is responsible for determining any additional loads due to snow drifting.

Technical Support Organization and Functions

RedBuilt has four strategically located Design Centers staffed by professional engineers and designers. Their role is to provide technical support and service to our RedBuilt representatives, the professional design community, and the manufacturing plants. Design Center personnel have access to extensive test data, production standards, building code product acceptance criteria, and the most current computer design software.

The Design Centers work closely with our RedBuilt representatives and can provide the following services:

- Review and analysis of potential applications submitted by our RedBuilt representatives
- Drawings showing placement, bearing conditions, dimensions, and installation suggestions
- Custom design of the product
- Assistance in resolving field problems should they arise

This design guide contains technical data and design information frequently required by the design professional when using our products. Because of the variety of possible conditions, the design professional is strongly encouraged to request support from RedBuilt Design Centers through one of our representatives.

Product Application Assumptions

Our warranty is subject to an adequate supporting structure for our products. The design of the entire structure is not the role of RedBuilt, nor can we assume accountability for the full function of the roof or floor system. We can only be responsible for the internal design integrity of our own products, which are structural components of roof and floor systems that are necessarily designed by others.

Our warranty is also subject to continuous lateral support to the compression flange of our products unless specific design provisions account for other lateral support conditions. Continuous lateral support is provided by 0.113" x 2½" nails at 24" on-center (minimum) for Red-I™ joists that are connected to an adequate diaphragm or total lateral strength system.

The magnitude, direction, and location of all design loads are as specified by the building designer. The review of this loading by our personnel is only for purposes of designing our product.

Other application assumptions are referenced on the terms and conditions of our purchase agreement contract.

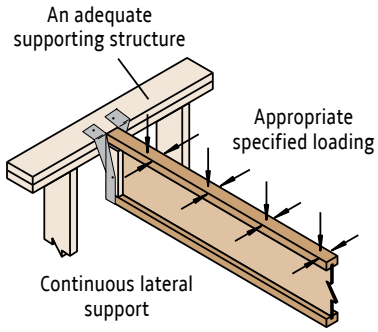

Analysis Procedure—Red-I™ Joists

Using the allowable stresses found in our code approvals, Red-I™ joists are analyzed according to the procedures outlined in ASTM D5055. Bending capacity is determined using the net area of the flanges (rout area deducted) as sole flexural strength, while stiffness considers the contributions of the web material as well. Shear and reaction capacity have been established through product tests, and properties are routinely confirmed through ongoing quality-control testing. Local web buckling in high shear locations, as well as bearing load transfer to the web, may require reinforcement of the web (usually by use of web stiffeners). Web stiffener requirements and fastening details have been established by testing.

The composite nature of the Red-I™ joist results in multiple control mechanisms—all of which are accounted for in testing but are generally unrelated to the shear mechanics of solid joists and timbers. For this reason, ignoring loads near supports is not generally appropriate, and the basic design shear is the vertical shear at the face of the support. In some cases, web confinement and inelastic beam behavior are observed to cause increases in shear strength during testing of members that are continuous over a support. Deflection of Red-I™ joists is closely predicted through flexural and shear deflection analysis, using composite action with the sheathing for nailed or glue-nailed attachments.

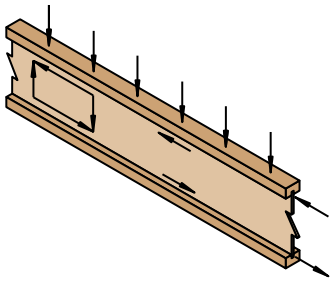

Concentrated and Non-Uniform Loads

For the most efficient use of RedBuilt™ products resisting concentrated loads, non-uniform loads, and/or in conditions other than simple spans, consult your RedBuilt representative for precise sizing. As a general rule, extra members should be added to the system to carry concentrated loads such as bearing partitions, air conditioners, and other mechanical equipment. In some cases, a solid rectangular member such as a RedLam™ LVL beam may be an efficient solution. Handling concentrated loads in this manner usually provides the most economical system and also helps ensure more uniform deflection.

Q1: What type of certification and quality assurance do Red-I™ joists have?

A1: RedBuilt™ Red-I™ joists are manufactured in accordance with rigorous standards and are monitored by a third party quality control agency. These standards are documented in current evaluation reports in major model building codes, which are also referenced in this guide.

Q2: What types of adhesives are used in Red-I™ joists, and are they waterproof?

A2: Red-I™ joists are manufactured using waterproof, thermoset adhesives such as resorcinol and phenol formaldehyde. These adhesives meet the requirements of ASTM standard D2559.

Q3: What is the level of formaldehyde emissions from the adhesives in your Red-I™ joists?

A3: It is less than 0.10 parts per million (ppm).

Independent third-party testing[1] shows that products manufactured with these adhesives do not emit significant amounts of formaldehyde. When tested in accordance with the ASTM large-chamber test[2], the formaldehyde emissions of these products were below 0.10 ppm, which is below even the most stringent regulatory requirements. In many cases, emissions were so low that they could not be distinguished from background levels of formaldehyde in the fresh air used during testing.

Q4: Are tapered or cambered Red-I™ joists available?

A4: Yes. RedBuilt offers the Red-I65T™ series joist in a single slope, tapered profile to provide minimum roof slopes for drainage. For more details, refer to our *Tapered Red-I65T Joist* guide (available at redbuilt.com). A nominal camber can also be built into some Red-I™ joist products (see **Red-I™ Joist Descriptions** on page 4). Contact your RedBuilt representative for more information.

Q5: Do Red-I™ joists meet the requirements set forth in the U.S. Green Building Council's (USGBC) Leadership in Energy and Environmental Design (LEED) standard?

A5: LEED – NC (new construction) is a commonly used building rating system designed to accelerate the development of green building practice. While products such as Red-I™ joists are not LEED certified on an individual basis, they may contribute to point totals for a "whole building" certification. For example, the following items may be viewed as contributors toward points in the LEED rating system:

- The **Low Emitting Materials** section (EQ 4.4) recognizes composite wood that is free from urea-formaldehyde resins. RedBuilt does not use urea-formaldehyde resins in any of its engineered lumber products. Material Safety Data Sheets (MSDS) are available at redbuilt.com.
- RedBuilt™ products may qualify for Regional Materials (MR 5.1 & 5.2) for projects located within a 500 mile radius of Portland, OR.
- Hardware accessories to Red-I™ joists, such as Simpson Strong-Tie® hangers, may qualify for Recycled Content (RC 4.1 & 4.2). For more information visit Simpson's website at strongtie.com.

Q6: Are repetitive-member increases allowed in Red-I™ joist design?

A6: No. The product qualification model in ASTM D5055 modifies the resistive-moment values so they closely model wood I-joist moment capacity. However, that procedure does not use a repetitive-member increase, so an increase to the Red-I™ joist moment values shown in this design guide is not applicable.

Q7: Are there special considerations for shear design in Red-I™ joists?

A7: Yes. In wood design, it is common practice to neglect all uniform loads within a distance equal to the joist depth; however, that does not apply to Red-I™ joists at end bearing locations. In addition, it is critical that Red-I™ joists be designed for both reaction and shear at supports.

References:
(1) Technical Note J330D: Formaldehyde and Engineered Wood Products, APA - The Engineered Wood Association
(2) Standard Test Method for Determining Formaldehyde Concentrations in Air and Emission Rates from Wood Products Using a Large Chamber, ASTM E1333

Q8: What are the deflection criteria most commonly used when selecting Red-I™ joists?

A8: Red-I™ joist deflections must meet all applicable building codes and any criteria specified by the building designer. But as the graph on page 20 shows, the RedBuilt-recommended deflection limits for residential and commercial floors are more restrictive than the minimums required by typical building codes.

It is important to note that designing a floor around a deflection limit is often not enough to ensure good floor performance. Individual perceptions of floor vibration vary, and they are influenced by a variety of factors associated with floor construction. Refer to the FloorChoice™ Floor Performance brochure, available online at redbuilt.com, to learn more about floor performance.

Q9: Are there special considerations when using double Red-I™ joists?

A9: Yes. With double Red-I™ joists, if a load is applied to the side of one member, you must connect the two Red-I™ joists together at the loading point to transfer the load equally into both members. For more specific information, see details 7 and 8 on page 12.

To ensure the lateral stability of both joists when loads are applied from above, the Red-I™ joists must be connected as shown in detail 10 on page 12.

RedBuilt™ recommends using rectangular sections in lieu of double Red-I™ joists, where possible. RedLam™ LVL beams, available in joist-compatible depths, are often the simple solution.

Q10: Is the 1½"-thick flange on commercial Red-I™ joists sufficient for the nail penetration required by building code diaphragm tables?

A10: Yes. A 1½"-thick (or thicker) flange meets the fastener penetration requirements stated in building code diaphragm tables such as 2015 SDPWS Tables 4.2A, 4.2B, and 4.2C. Note "Minimum Fastener Penetration in Framing" values in those tables.

Q11: How do I account for snowdrift loading on Red-I™ joists?

A11: Snowdrift loading should be considered by the designer in any snow load area where roof projections and/or changes in roof elevations could allow snow to accumulate. Specific design criteria fall under the jurisdiction of local building codes.

Q12: Does RedBuilt provide guidelines for the installation of Red-I™ joists?

A12: Yes. Installation guides are provided with every Red-I™ joist delivery. Typical construction applications and details can be found in the guide, and particular attention should be given to the handling, storage, safety bracing, and installation instructions. Shop drawings showing job-specific information are also furnished upon request. A copy of our *Red-I™ Joist Installation Information* can also be downloaded from redbuilt.com.

Q13: Are Red-I™ joists covered by a warranty?

A13: Yes. RedBuilt warrants that its products will be free from manufacturing errors or defects in workmanship and material. In addition, provided the product is correctly installed and used, the company warrants the adequacy of its design for the normal and expected life of the building. A copy of our Product Warranty can be found on the last page of this guide or on our website at redbuilt.com.

Q14: Does RedBuilt provide any fire-rated assembly details?

A14: Yes. RedBuilt provides a number of AutoCAD fire assembly details, which can be downloaded from our website at redbuilt. com. Refer to *ICC-ES Report ESR-2994* for complete description of detail construction.

Q15: How can I contact a RedBuilt representative?

A15: You can find your local RedBuilt representative by calling 1-866-859-6757 or through the "Build With Us" page on our website at redbuilt.com.

RED-I™ JOIST SPECIFICATIONS

1.0 General

1.1 Scope
This work includes the complete furnishings and installation of all Red-I™ joists, as shown on the drawings herein specified and necessary to complete the work.

1.2 Code Approvals
These products shall be designed and manufactured to the standards set forth in the International Code Council Report No. ESR-2994.

1.3 Related Work Specified Elsewhere
A. Carpentry and millwork
B. Glu-laminated members

1.4 Design
A. Products: RedBuilt™ products shall be designed to fit the dimensions and loads indicated on the plans.

B. Design Calculations: When requested, a complete set of design calculations shall be prepared by RedBuilt.

1.5 Submittals
A. Drawings: Drawings showing layout and detail necessary for determining fit and placement in the building shall be provided by RedBuilt.

B. Production: Fabrication and/or cutting shall not proceed until the architect and/or engineer have approved the submittal package.

2.0 Products

2.1 Materials
Flange members, web members and adhesives shall conform to the provisions of ICC-ES Report No. ESR-2994.

2.2 Fabrication
Red-I™ joists shall be manufactured by RedBuilt in a plant listed in the report referred to above and under the supervision of an approved third-party inspection agency.

2.3 Tolerances
Depth: ± 1/16"
Flange Width: ± 1/16"

2.4 Identification
Each of the joists shall be identified by a stamp indicating the joist series, ICC-ES report number, manufacturer's name, plant number, date of fabrication, and the independent inspection agency's logo.

2.5 Hardware
Not applicable.

3.0 Execution

3.1 Installation
Red-I™ joists, if stored prior to installation, shall be protected from the weather. They shall be handled with care so they are not damaged. Red-I™ joists shall be installed in accordance with the plans, and any RedBuilt drawings and installation suggestions. Temporary construction loads that cause stresses beyond design limits are not permitted. Safety bracing is to be provided by the installer to keep the Red-I™ joists straight and plumb as required, and to ensure adequate lateral support for the individual Red-I™ joist members and the entire system until the sheathing material is applied.

3.2 Installation Review
Prior to enclosing the Red-I™ joists, the Contractor shall give notification to the RedBuilt representative to provide an opportunity for review of the installation.

3.3 Performance Standards
Products shall be proven by testing and evaluation in accordance with the provisions of ASTM D5055.

3.4 Fire Rating/Sound Rating
Fire and sound ratings are to be established in accordance with the assemblies detailed in ICC-ES Report No. ESR-2994, or the D*irectory of Listed Products* published by Intertek Testing Services.

3.5 Warranty
The products delivered shall be free from manufacturing errors or defects in workmanship and material. The products, when correctly installed and maintained, shall be warranted to perform as designed for the normal and expected life of the building.

4.0 Alternates and/or Equals

4.1 Base Bid
Due to the customized detailing and engineering characteristics of the roof and/or floor framing assembly, it is a requirement that Red-I™ joists be used in the base bid.

4.2 Alternate Manufacturers
Other manufacturers' bids are to be listed in the alternate section of your proposal. All framing plans, detailing, and calculations for the alternate bids will be reviewed by the owner, architect, and engineer for structural performance, possible conflicts with related trades, and compatibility with the overall building requirements and building code.

4.3 Alternate Products
Alternate products will only be permitted if written approval and acceptance is obtained by both architect and owner at least seven days prior to the bid date. Any monetary savings that may be realized by using an alternate product shall be forwarded to the owner.

4.4 Acceptable Alternatives
At the discretion of the specifier of record, accepted alternates will be listed on the final addendum prior to the bid date.

Refer to local building codes for live load design requirements.

Composition Roofing

2–15 and 1–90 lb ..... 1.7 psf
3–15 and 1–90 lb ..... 2.2 psf
3-ply and gravel ..... 5.6 psf
4-ply and gravel ..... 6.0 psf
5-ply and gravel ..... 6.5 psf
Insulated Roof Membrane Assembly (IRMA)
  2" thick ..... 13.0 psf
Single-ply roofs (insulation not included)
  Ballasted system ..... 13.0 psf
  Mechanically fastened ..... 2.0 psf
  Fully adhered ..... 2.0 psf

Douglas Fir Sheathing*

(Based on 36 pcf for plywood, 40 pcf for OSB)

½" plywood ..... 1.5 psf
⅝" plywood ..... 1.8 psf
¾" plywood ..... 2.3 psf
1⅛" plywood ..... 3.4 psf
½" OSB ..... 1.7 psf
⅝" OSB ..... 2.0 psf
¾" OSB ..... 2.5 psf
⅞" OSB ..... 2.9 psf
1⅛" OSB ..... 3.7 psf

* For southern pine weights, increase Douglas fir weights by 10%.

Miscellaneous Roofing Materials

Corrugated galvanized steel
  16 ga ..... 2.9 psf
  20 ga ..... 1.8 psf
  22 ga ..... 1.5 psf
  24 ga ..... 1.3 psf
Asphalt shingles ..... 2.5 psf
Wood shingles ..... 3.0 psf
Clay tile ..... 9.0 to 14.0 psf
Slate (⅜" thick) ..... 15.0 psf

Rigid Insulation (1" thick)

Hemlock ..... 1.2 psf
Cork ..... 0.7 psf
Polystyrene foam ..... 0.2 psf
Foamglass ..... 0.8 psf
Rigid fiberglass ..... 1.5 psf

Roll or Batt Insulation (1" thick)

Rock wool ..... 0.2 psf
Glass wool ..... 0.1 psf

Floors

Hardwood (nominal 1") ..... 4.0 psf
Concrete (1" thick)
  Regular ..... 12.0 psf
  Lightweight ..... 8.0 to 10.0 psf
Gypsum concrete (¾" thick) ..... 6.5 psf
Sheet vinyl ..... 0.5 psf
Carpet and pad ..... 1.0 psf
¾" ceramic or quarry tile ..... 10.0 psf

Ceilings

Acoustical fiber tile ..... 1.0 psf
½" gypsum board ..... 2.2 psf
⅝" gypsum board ..... 2.8 psf
Plaster (1" thick) ..... 8.0 psf
Metal suspension system (including tile) ..... 1.8 psf

To calculate total dead load, use a minimum of 1.5 psf for "miscellaneous" with all dead loads.

Weights of Douglas Fir Framing Members

Nominal Size (in.)	Joist Spacing		
	12"	16"	24"
2x4	1.4 psf	1.1 psf	0.7 psf
2x6	2.2 psf	1.7 psf	1.1 psf
2x8	2.9 psf	2.2 psf	1.5 psf
2x10	3.7 psf	2.8 psf	1.9 psf
2x12	4.4 psf	3.3 psf	2.2 psf
3x6	3.6 plf		
4x6	5.0 plf		
4x8	6.8 plf		
4x10	8.6 plf		
4x12	10.4 plf		

- For southern pine weights, increase Douglas fir weights by 10%

Weights of Sprinkler Lines

Size of Pipe	Schedule 40, Standard Pipe		Schedule 10, Thin Wall Pipe	
	Dry (plf)	Wet (plf)	Dry (plf)	Wet (plf)
1"	1.7	2.1	1.4	1.8
1¼"	2.3	3.0	1.8	2.5
1½"	2.7	3.6	2.1	3.1
2"	3.7	5.2	2.7	4.2
2½"	5.8	7.9	3.6	5.9
3"	7.6	10.8	4.3	8.0
3½"	9.2	13.5	5.0	9.8
4"	10.9	16.4	5.6	11.8
5"	14.8	23.5	7.8	17.3
6"	19.2	31.7	9.3	23.1
8"	28.6	50.8	16.9	40.1
10"	40.5	74.6		

- For additional information on sprinkler systems, see RedBuilt's *Sprinkler System Installation Guide* (available online at RedBuilt.com)

Approximate Weights of RedBuilt™ Products

	Series	Weight (plf)
Trusses	Red-L™	3.75–4.25
	Red-W™	4.50–5.25
	Red-S™	4.75–5.75
	Red-M™	8.00–9.00
	Red-H™	10.00–12.00
Joists	Red-I45™	2.2–3.5
	Red-I65™	3.3–6.1
	Red-I90™	4.3–7.1
	Red-I90H™	4.6–7.1
	Red-I90HS™	6.0–9.1

Structural Composite Lumber	Density (pcf)
2.0E RedLam™ LVL	42
LSL	45

- PLF Unit Weight = (density) x (width) x (depth)

Product Sizing Software

Specifying Made Simple

RedSpec™ is a free, user-friendly design program that helps engineers, architects, and designers quickly create accurate floor and roof system specifications using RedBuilt's engineered wood products.

Design Faster. Specify Smarter.

Simplify your workflow and move from concept to specification with confidence. RedSpec streamlines the process of sizing and analyzing structural members—so you can focus on delivering efficient, high-performing designs.

Features Include:

- **Always Up to Date:** Skip the update hassle. RedSpec runs the latest version every time you log in.
- **Automatic Saving:** Every click and every design status is saved instantly, so your work stays secure.
- **Real-Time Collaboration:** Share projects with any registered RedSpec user and work together with your team instantly.
- **Company Workspace (Entity):** Bring your whole company together. Anyone with the same company email address can see each other's projects on the Home screen and work as a team.
- **Powerful Search Bar:** Find any project or folder in seconds. Narrow your results with filters for "Shared with me," "Owned by me," and "By owner."
- **Roaming Loads:** Design with confidence by analyzing any member with a concentrated dead load placed at worst-case locations.
- **Hangers:** Stay current with a real-time connection to the cloud-based Simpson Hanger Engine, delivering the latest information from Simpson Strong-Tie®.
- **FloorChoice™:** Our proprietary floor performance rating system for I-Joists and OpenWeb trusses.
- **Optimization:** Let RedSpec do the heavy lifting by selecting the most economical series, depth, and spacing for your floor or roof system.

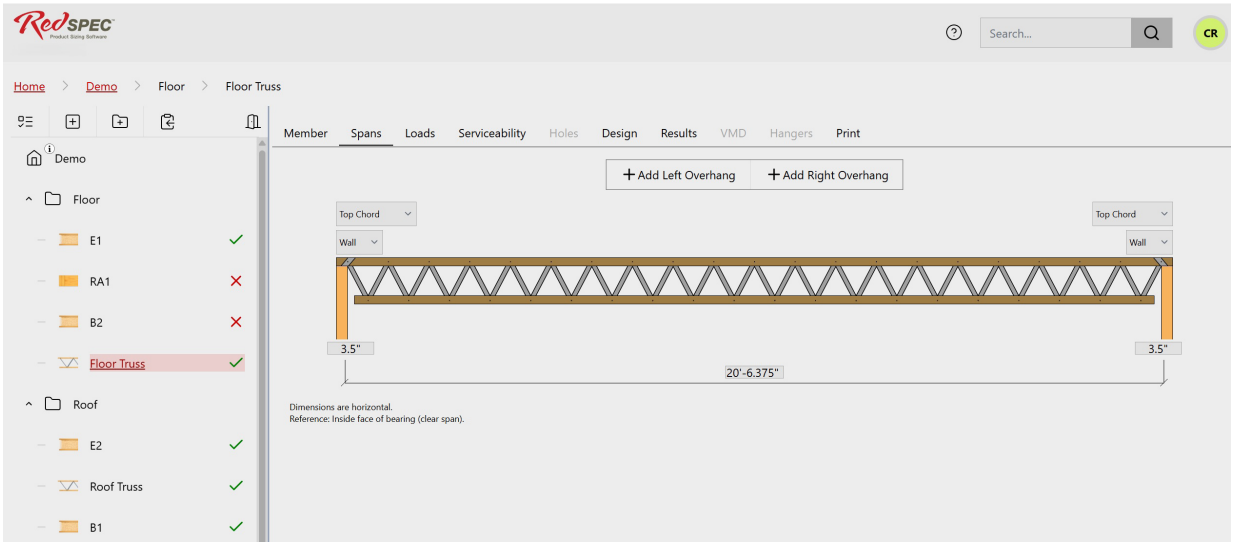

RedSpec™ is provided free of charge to registered users.

SERVICE AND SUPPORT YOU CAN COUNT ON.

RedBuilt is committed to creating superior structural solutions. How? By offering efficient structural building products supported by a broad range of services.

- Our team of RedBuilt representatives—one of the industry's largest—isn't afraid to get its hands dirty. We can help with technical information, installation questions or code compliance.
- At RedBuilt, our goal is to help you build solid and durable structures. A limited warranty for our products is in effect for the expected life of the building.
- Call us with a problem that you believe may be caused by our products, and our representative will contact you within one business day to evaluate the problem and help solve it—**GUARANTEED.**



CONTACT US

1.866.859.6757
redbuilt.com
200 E. Mallard Drive, Boise, ID 83706
P.O. Box 60, Boise, ID 83707

© 2023 RedBuilt LLC. All rights reserved.

RED0029-03/26

This document supersedes all previous versions. If this is more than one year old, contact your RedBuilt representative.

SFI marks are registered marks owned by the Sustainable Forestry Initiative Inc.